Technical Bulletins Sorted By Bulletin Number
Generated 12/31/92

TB No.	Cat No.	Rev. Date	Description
I/O:001	26-1156	Nov 23, 1982	To prevent damage to the power supply due to improper connection.
I/O:002	26-1171	Nov 24, 1982	To correct the problem of intermittent or missing AC power.
I/O:003	26-1157	Nov 24, 1982	To clarify the use of the WP50 control codes in BASIC.
I/O:004	26-1157	Nov 24, 1982	To correct poor ribbon advance from left to right.
I/O:005	26-1157	Nov 30, 1982	To identify defective home and ribbon sensors.
I/O:006	26-1157	Dec 6, 1982	Hammer intensity adjustment procedure.
I/O:007	26-1157	Dec 7, 1982	To identify servo board and platen motor combinations.
I/O:008	26-1157	Dec 7, 1982	To correct the printing of wrong characters, printer lock up, or carriage moving
I/O:009	26-1157	Dec 7, 1982	Parallel interface board schematic.
I/O:010	26-1157A	Dec 9, 1982	To identify printer control codes that can be used in BASIC.
I/O:011	26-1157A	Dec 13, 1982	To disable auto line feed.
I/O:012	26-1157A	Dec 21, 1982	To correct missing characters on the Qume printer.
I/O:013	26-1154A	Dec 30, 1982	To correct errors in service manual.
I/O:014	26-1159	Dec 30, 1982	Carriage speed adjustment procedure.
I/O:015	26-1156A	Dec 30, 1982	To enable the optional character set.
I/O:016	26-1156	Jan 3, 1983	To disable auto line feed.
I/O:017	26-1165	Jan 27, 1983	To correct unexplained lockups of the Line Printer V.
I/O:018	26-1166	Jan 26, 1983	To correct loud singing noise in line feed motor.
I/O:019	26-1167	Jan 27, 1983	To correct poor print quality
I/O:020	26-1167	Feb 4, 1983	To identify the different logic boards for the Line Printer VII.
I/O:021	26-1167	Feb 7, 1983	To correct improper head movement.
I/O:022	26-1168	Feb 7, 1983	To correct the problem of the Alert light coming on at power up.
I/O:023	26-1158	Mar 14, 1983	Replacement procedure for the Daisy Wheel line feed motor.
I/O:024	26-1448	Mar 14, 1983	To allow the Sheet Feeder interface board to be used on the new Daisy Wheel II
I/O:025	26-1158	Mar 14, 1983	To correct loose connections on the Select and Space Preamplifier board.
I/O:026	26-1158	Mar 14, 1983	To describe the symptoms of a defective Print Wheel.
I/O:027	26-1260	Mar 14, 1984	Envelope Feeder adjustment procedure.
I/O:028	26-1158	Mar 14, 1983	Identify and explain test points 1, 2, 3, and 4 on main logic board.
I/O:029	26-1448	Oct 15, 1987	To describe correct connection points for the sheet/envelope feeder interface bo
I/O:030	26-1448	May 13, 1984	Test procedures for the Daisy Wheel II Sheet Feeder.
I/O:031	26-1158	Sep 24, 1985	Select and Space Sensor Board alignment procedure and to explain the differences
I/O:032	26-1158	May 24, 1983	To describe a new ROM for Daisy Wheel II main PCB (Early version).
I/O:033	26-1171	May 24, 1983	To identify different revision boards in the Telephone Interface II.
I/O:034	26-1172	May 24, 1983	To correct problem of the carrier detect light staying on in absence of carrier.
I/O:035	26-1173	May 24, 1983	Modification for multi-line use and number of rings before answering.
I/O:036	26-1173	May 24, 1983	To correct problem of: Modem II does not recognize CD and hangs up even though c
I/O:037	26-1210	Jul 7, 1983	Schematics for the Network I.
I/O:038	26-1211	Sep 9, 1983	To correct inoperative CSAVE function.
I/O:039	14-818	Mar 2, 1983	Head azimuth alignment procedures.
I/O:040	26-1205	Mar 3, 1983	To correct overly critical volume setting when loading programs.
I/O:041	26-4104	Aug 26, 1983	To correct small hash marks in the first eight inches of the left side of the vi
I/O:042	26-4001	Jul 11, 1983	Replacement procedure for black and white CRTs.
I/O:043	26-6050	Jun 23, 1983	To discuss problems with DT-1 sending all capital letters.
I/O:044	26-1250	Apr 22, 1983	To correct test points given is service manual for SEL Drive and SP Drive adjust
I/O:045	26-1156A	Feb 15, 1983	To correct the problem of printer only printing the letter H when self test is i
I/O:046	26-1255	Jul 15, 1983	To correct garbage being printed by the DMP 120 when used with Color Computer Sc
I/O:047	76-1001	Jun 30, 1983	Problem of printing "+" when rubout character is received (7F Hex).
I/O:048	26-1173	Oct 21, 1982	On some phone systems, and at some remote locations, the Modem II may not answer
I/O:049	76-1005	Nov 22, 1982	BiSync and the functions of the other DIP switches.
I/O:050	26-4104	Nov 4. 1982	When using the Model II/16 Graphics Board option; random bits may remain "stuck"
I/O:051	26-1136	Jul 26, 1985	Installation procedures for Network 4.
I/O:052	26-6050	Dec 23, 1982	To prevent or cure vertical lines in video.
I/O:053	26-1212	Feb 23, 1983	Network III will lock onto one channel even if that channel is not 'occupied'. T
I/O:054	26-1192	Feb 3, 1983	To describe the changes on PCB concerning BUSY* and FAULT Lines, and to document
I/O:055	26-6503	Dec 8, 1986	To disable false parity signals.
I/O:056	26-1211	Dec 15, 1983	To correct an incompatability of the Network 2 with the Model 100 and the Color

TB No.	Cat No.	Rev. Date	Description
I/O:057	26-1257	Sep 16, 1983	To discuss hammer defeat via dip switch settings.
I/O:058	26-1250	Sep 21, 1983	Discuss bit setter adjustment procedure.
I/O:059	26-1429	Oct 6, 1983	Unit exhibits repetitive failure -- blows fuses (F1) and the Transient Suppresso
I/O:060	26-1174	Oct 17, 1983	To reduce rush current on power-up which damages the power switch.
I/O:061	26-1256	Sep 15, 1983	To outline proper mechanical and electrical adjustments for the DMP-2100 Printer
I/O:062	26-6013	Nov 3, 1983	To correct intermittent operation and increase reliability.
I/O:063	26-1173	Dec 15, 1983	Enables Modem II use with Xenix.
I/O:064	26-1256	May 20, 1985	Modification to BUSY* and FAULT* status lines.
I/O:065	26-1158	Feb 2, 1984	To provide information on the new power supply unit for the Daisy Wheel II Print
I/O:066	26-6050	Jul 17, 1984	To prevent or cure problems with printing and/or unit going into monitor mode.
I/O:067	26-1212	Jun 5, 1984	To correct improper installation of resistor packs on controller PCB.
I/O:068	26-1158	Jun 5, 1984	To help eliminate envelope skewing when envelopes are fed through the envelope f
I/O:069	26-1251	Jun 19, 1984	To correct paper skew problems.
I/O:070	26-1272	Jun 27, 1984	Modification and Fix Kit for Top-of-Form and Line Feed Problems.
I/O:071	26-1922	Jul 30, 1984	To eliminate distortion when using on a Model 4 with a Model III High-Resolution
I/O:072	26-1173	Aug 3, 1984	Modem will not work properly in manual originate mode, but does work in auto ori
I/O:073	26-1198	Mar 7, 1985	Service information.
I/O:074	Floppy_Drive	Sep 6, 1984	Reduce or eliminate soft errors on floppy drives.
I/O:075	26-1272	Aug 27, 1985	To correct Top-of-Form problem.
I/O:076	26-6052	Aug 26, 1988	ROM replacement to cure problems with local printing.
I/O:077	26-6052	Oct 10, 1984	To discuss built in diagnostics on the DT-100
I/O:078	76-1001	Oct 18, 1984	To correct and clarify the modem alignment procedure contained in the PT-210 Ser
I/O:079	26-3144	Dec 14, 1984	To eliminate distortion caused by using the wrong transistor in the -5V power su
I/O:080	26-1254	Dec 28, 1984	To eliminate sensitivity to long strobe pulses.
I/O:081	26-6052	Dec 28, 1984	To define a Printer Protocol problem with the DT100 and explain the work-around.
I/O:082	26-1256	Feb 12, 1985	To describe the procedure for upgrading a DMP-2100 to a DMP-2100P.
I/O:083	26-1269	Apr 23, 1985	To improve the reliability of the clock signal.
I/O:084	26-3650B	Feb 11, 1985	To describe the correct 1K RAM pack usage for the PC-4A.
I/O:085	26-1176	Feb 15, 1985	To correct a short in the logic board.
I/O:086	26-1271	Mar 11, 1985	To clarify working combination of EPROMs, Masked ROMs, and programmed MPUs.
I/O:087	26-3612	Mar 18, 1985	To discuss the component changes with the use of a new crystal in the oscillator
I/O:088	26-1274	May 15, 1986	To discuss the use of new ROM's on the Control Logic Board and the use of a new
I/O:089	26-1257	Jul 03, 1985	Additional alignment procedure to eliminate double vertical bar problem.
I/O:090	26-1176	Apr 19, 1985	To prevent crystal oscillator from oscillating at its third harmonic.
I/O:091	26-1477	Oct 20, 1985	To clarify the procedure for installing the paper empty option on the Sheet Feed
I/O:092	26-1277	Jul 15, 1985	To correct a problem with DMP430 printers not working with a Model 2000.
I/O:093	26-1176	Aug 15, 1985	To eliminate problems caused by possible faulty relays.
I/O:094	26-1160	Apr 16, 1986	To describe an alternative to replacement of the load arm when the head load pad
I/O:095	26-3144A	Aug 28, 1985	Prevent audible noise.
I/O:096	26-1176	Sep 24, 1985	To reduce noise on signal filter U23.
I/O:097	26-1189	May 26, 1986	To clarify proper wiring of the logic board, and to outline an alignment procedu
I/O:098	26-6050	Oct 31, 1985	To keep the DT-1 from holding the DMP 130, DMP 430, or TRP 100 printers in a con
I/O:099	26-1280	Jan 13, 1986	To discuss a change in the ROMs.
I/O:100	26-1245	Sep 8, 1986	To describe controller ROM replacement to enable the use of a secondary cartridg
I/O:101	26-6013	Jun 23, 1987	To prevent terminal overrun problems on the Multiterminal Interface Board in a X
I/O:102	25-1003	Apr 30, 1986	To eliminate garbled received data.
I/O:103	26-1189	Jun 17, 1986	To explain installation procedures for the new batteries being used in the Backu
I/O:104	26-1245	Jun 23, 1986	To remedy possibly unstable or overly low output voltages which may cause errati
I/O:105	26-1250	Jun 19, 1986	To explain alignment of shift magnets after replacement.
I/O:106	26-1176	Jun 27, 1986	To insure proper ring detect when connected to 5ESS central office equipment.
I/O:107	25-3022	Oct 27, 1986	Enable a DCS and a TCS to operate together in a Xenix environment.
I/O:108	25-3021	Jun 29, 1987	To allow the TCS-100 to work in a Xenix environment.
I/O:109	25-3020	Aug 8, 1986	To discuss the beginning of tape and end of tape sensing circuit and possible fa
I/O:110	26-1245	Nov 3, 1986	To correct a problem which may cause the 5 and 12 volt power supply to be low in
I/O:111	26-1158	Jan 27, 1987	Make DW-II work with some Xenix systems.
I/O:112	25-1013	Feb 23, 1987	To describe switch settings and fuse replacement.

TB No.	Cat No.	Rev. Date	Description
I/O:113	26-1158	Jan 26, 1987	Discuss DW-II and DWP-510 power boards.
I/O:114	25-1028	Aug 14, 1989	Trackstar and Trackstar E installation procedures.
I/O:115	25-3046B	Oct 13, 1987	To correct random dot noise after warm-up.
I/O:116	26-2810	Jan 13, 1988	To describe a problem caused by improperly set jumpers.
I/O:117	26-2804	Feb 17, 1988	To eliminate scraping noise caused by the cleaning blade.
I/O:118	26-0250	Mar 18, 1988	To warn of a possible shock hazard when the backup power supplies are in inverte
I/O:119	26-2804	Mar 24, 1988	Describe procedure to adjust the fusing temperature.
I/O:120	25-1031	May 16, 1988	Provide installation information for the RS-232C Plus Board.
I/O:121	25-1013	Jun 14, 1988	Tandy 4000/SCO Xenix 386/1200 Baud Modem problems caused by RI input to the ACE.
I/O:122	26-2800	Jun 29, 1988	To prevent possible margin and spacing errors.
I/O:123	25-4064	Jun 29, 1988	To make the DCS bootable when using 3.30 MS-DOS or when the DCS is installed in
I/O:124	26-1250	Aug 3, 1988	Identification and interchangeability of the logic boards for the DWP-410.
I/O:125	25-1008	Aug 8, 1988	Network loading errors in large Network 4 installations.
I/O:126	26-2804	Oct 5, 1988	Describe the procedure for upgrading the RAM from 1.5 Meg to 2.0 Meg.
I/O:127	26-6052	Oct 11, 1988	To insure keyboard connectability.
I/O:128	26-0250	Oct 14, 1988	To clarify wiring connections for different power switches.
I/O:129	26-1280A	May 23, 1989	To prevent possible damage to the main logic board from power supply failure.
I/O:130	26-5435	Mar 7, 1989	To provide software compatibility when servicing an EtherlinkxR board in a PC Se
I/O:131	26-2804	Jun 9, 1989	Alleviate darkening of the right-hand edge caused by high heat.
I/O:132	25-4034	Jan 22, 1990	To assure reliability of the serial/parallel PCB.
I/O:133	26-2817	Jul 20, 1989	Describe procedure for changing parallel interface jumpers.
I/O:134	25-1037	Jul 25, 1989	To enable modem to go "ON HOOK" when remote modem drops carrier.
I/O:135	26-2804	Jan 20, 1992	To discuss common problems and solutions for the LP1000 laser printer.
I/O:136	25-4032	Jan 2, 1990	Adding an additional spring to keyboard keys to stop them from sticking, binding
I/O:137	90-2060	Dec 1, 1989	To explain the procedure for exchanging a "long" tape drive interface board for
I/O:138	26-2817	Feb 8, 1990	Schematic for a late style power supply.
I/O:139	25-1018	Apr 16, 1990	To eliminate possible shorting of components to chasis ground.
I/O:140	26-2839	May 8, 1990	Loose adapter board pins may cause the color ribbon motor to fail.
I/O:141	26-0250	May 21, 1990	Identify two different style transformers use in BPS 250.
I/O:142	25-4169	Jun 12, 1990	To outline belt and eject button replacement procedures.
I/O:143	25-1037	Jul 10, 1991	Correct possible shorts on the -12 Volt line.
I/O:144	26-2804	Jan 17, 1991	Gear alignment procedure to correct uneven print density across the paper.
I/O:145	26-2838	Feb 18, 1991	To correct paper jam errors due to a sticking sensor arm.
I/O:146	26-2844	Feb 22, 1991	How to selftest the Printer Selector 3.
I/O:147	26-2838	Apr 5, 1991	Correct procedure to reprogram the NVRAM containing life count values.
I/O:148	26-2804	Jul 15, 1991	To eliminate gray leading edge on paper when printing and to prevent erroneous t
I/O:149	26-2804	Jan 20, 1992	Loss of focus and horizontal darkening of areas of print.
I/O:150	26-2804	Jan 2, 1992	Symptoms and causes of failures related to optical units.
I/O:151	25-4043	Feb 7, 1992	Lack of video or missing video modes can be corrected on many boards by replacin
I/O:152	26-2808	Mar 10, 1992	Common repair procedures to eliminate printhead carriage "slams".
I/O:153	26-2838	Apr 20, 1992	Printer cannot access or select optional second paper tray.
I/O:154	26-2838	Apr 29, 1992	Printer fails to print properly with Windows 3.1 TrueType fonts.
I/O:155	25-4166	Jun 10, 1992	To identify the differences between the 25-4166 and 25-4166A.
I/O:156	26-2845	Aug 3, 1992	Correct procedure to perform vertical character alignment.
I/O:157	25-4079	Dec 18, 1992	Substituting a 25-4079A tape drive for a 25-4079 in SCO Xenix 386 systems.
I/O:158	26-2804	Aug 28, 1992	Adjustment for replacement development units that exhibit light print in LP1000
159	26-1245/6		DCS P/S REPLACEMENT PROCEDURE
160	26-2888/9		SCANNER LASER UNIT LOCKS UP PRINTER
161	26-2888		NEW ROM FOR TRUETYPE FONTS IN LANDSCAPE MODE

DATE: July 2, 1980

REVISION DATE: November 23, 1982

BULLETIN NO.: I/O:01

PRODUCT: 26-1156/1156A Line Printer III

SUBASSEMBLY: AX-8711 Power Supply PCB

PURPOSE: To prevent damage to the power supply due to improper connection.

DISCUSSION: The AC power supply connector block designators for the 26-1156 and the 26-1156A are not the same. Please note that this difference only applies to the AC connections. The DC connections are the same on both units. National Parts is only stocking the power supply for the 26-1156A (AX-8711) at the present time. There are still older units (26-1156) which have not been in for service. These will still have the older version of the power supply so pay special attention to these units.

PROCEDURE: Before installing any power supply in the Line printer III verify that it is the correct version power supply for that unit. To determine the power supply version open the power supply case and physically compare the AC power supply designators (J101-J106) to the attached schematic. If necessary make a continuity check from the individual connections to the components shown in the schematic. Once the version has been determined install the inputs to the AC terminal block as shown in the corresponding schematic for that version of the power supply.

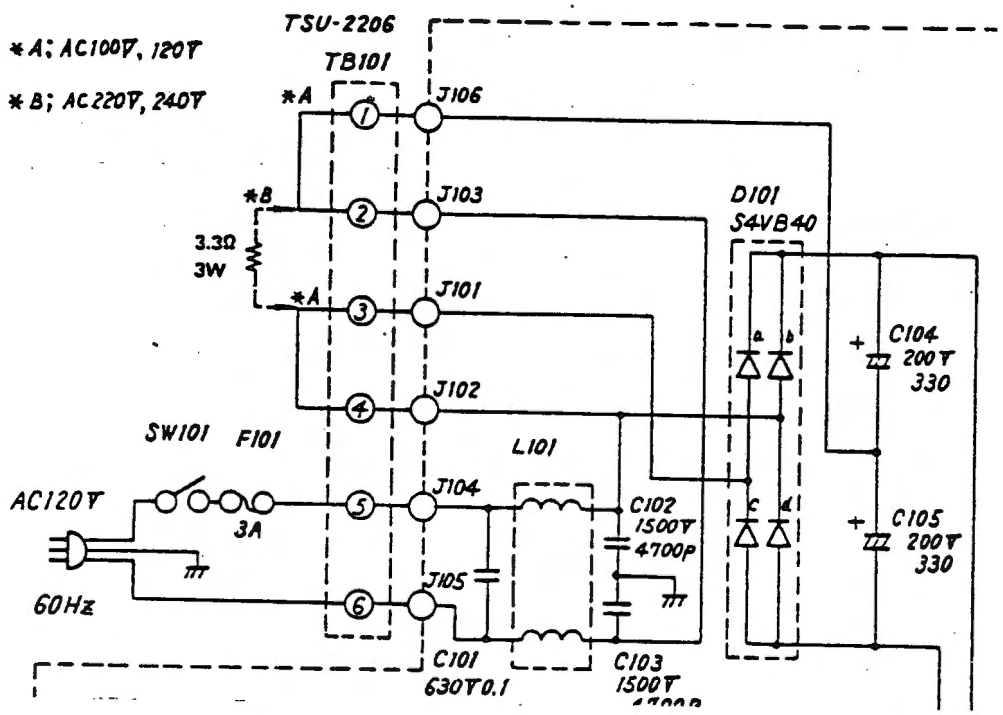

26-1156 POWER SUPPLY SCHEMATIC

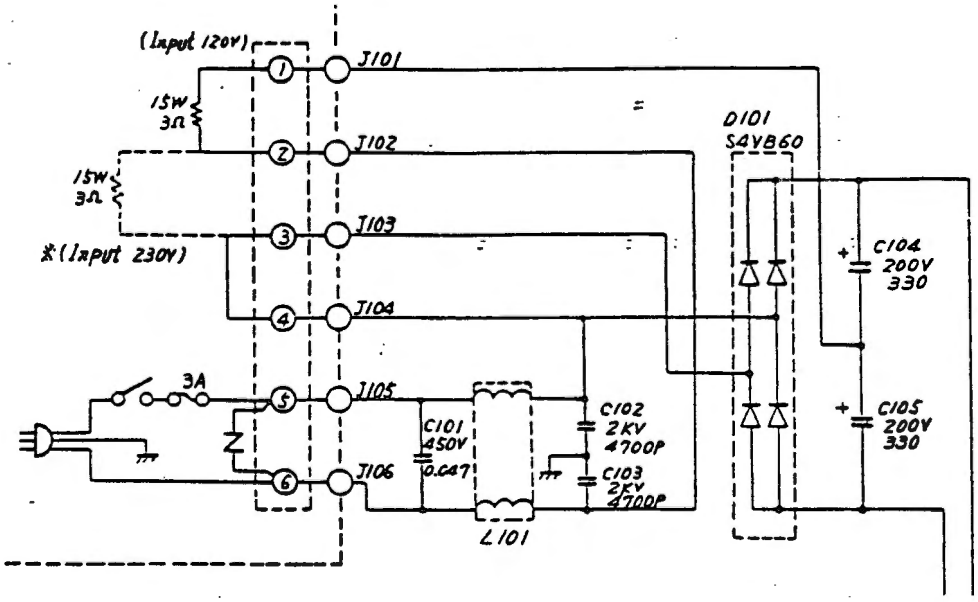

26-1156 "A" POWER SUPPLY SCHEMATIC

DATE: February 14, 1980

REVISION DATE: November 24, 1982

BULLETIN NO.: I/O:02

PRODUCT: 26-1171 Telephone Interface II

SUBASSEMBLY: AXX-7023 Main PCB

PURPOSE: To correct the problem of intermittent or missing AC power.

DISCUSSION: The circuit board trace just below the power connector (J3) is breaking due to stress applied by the connector. The problem is caused by insufficient trace area to securely anchor the connector or poor soldering.

PROCEDURE: Check the circuit board trace just below the power connector (J3) for hairline breaks or poor soldering. If necessary, remove the solder mask from the trace with an X-acto knife, and solder a short jumper wire across the power connector lead and the circuit board land.

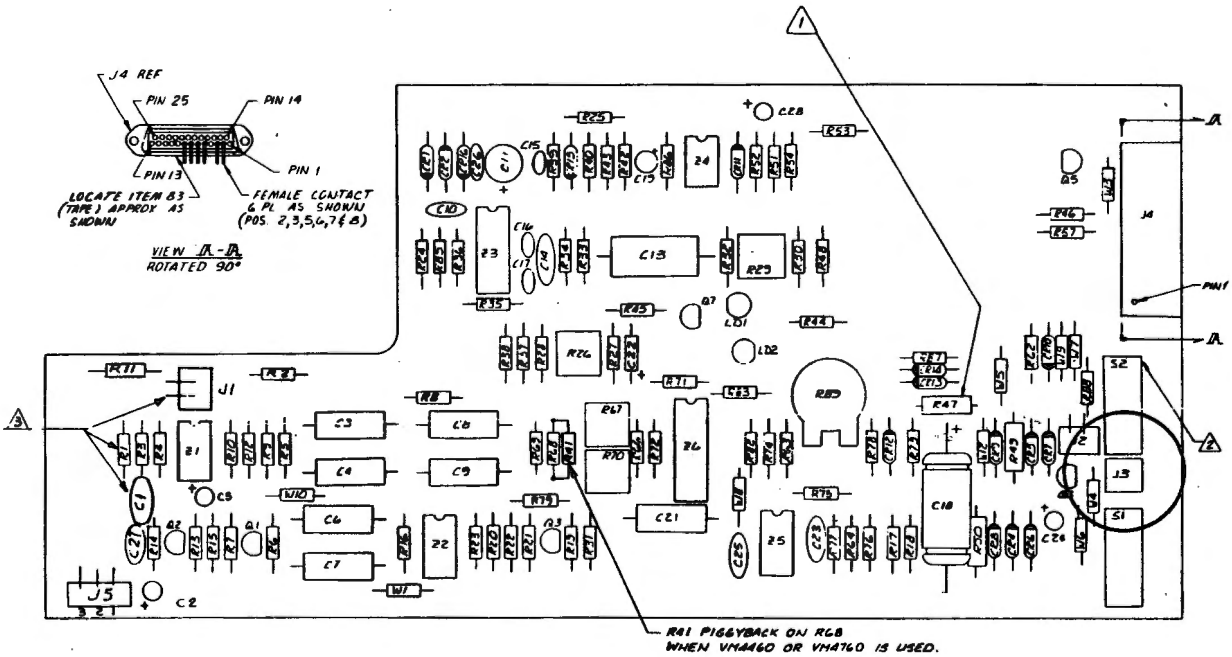

DATE: May 1, 1980

REVISION DATE: November 24, 1982

BULLETIN NO.: I/O:03

PRODUCT: 26-1157 WP50 Daisy Wheel Printer

SUBASSEMBLY: N/A

PURPOSE: To clarify the use of the WP50 control codes in BASIC.

DISCUSSION/PROCEDURE: The software controllable features which are listed on pages 36 and 37 of the WP50 Operator's Guide may be used in BASIC using the commands listed below:

Backspace	LPRINT CHR$ (08)	
Line Feed	LPRINT CHR$ (10)	
Carriage Return	LPRINT CHR$ (13)	
Select.	LPRINT CHR$ (17)	
Deselect	LPRINT CHR$ (19)	
Space	LPRINT CHR$ (32)	
Delete	LPRINT CHR$ (127)	
10 Pitch	LPRINT CHR$ (27); CHR$ (15)	Normal Mode
12 Pitch	LPRINT CHR$ (27); CHR$ (16)	
6 Lines per inch	LPRINT CHR$ (27); CHR$ (54)	Normal Mode
4 Lines per inch	LPRINT CHR$ (27); CHR$ (52)	
3 Lines per inch	LPRINT CHR$ (27); CHR$ (51)	
Print c	LPRINT CHR$ (27); CHR$ (32)	
Print	LPRINT CHR$ (27); CHR$ (127)	

DATE: May 2, 1980

REVISION DATE: November 24, 1982

BULLETIN NO.: I/O:04

PRODUCT: 26-1157 WP50 Daisy Wheel Printer

SUBASSEMBLY: AXX-0319 Servo PCB Revision 100 and 101

PURPOSE: To correct poor ribbon advance from left to right.

DISCUSSION: The ribbon advance circuit has two ribbon drive motors. Each is responsible for driving the ribbon one direction. While one motor is driving the ribbon the other motor is creating a little opposition so the ribbon will remain tight. The problem occurs when the ribbon is being advanced from left to right. The right motor drive voltage is not sufficient to overcome the opposition of the left motor. By increasing the resistance of R63, the drive voltage to the right motor is increased allowing it to overcome the opposition from the left motor.

The WP50 automatically powers up with the ribbon advancing from right to left. By printing a small amount of text and powering off and then on again, it is possible to use the same spot on the ribbon many times causing light print or breakage of the ribbon. To get better life out of the ribbon, leave the printer on even when it is not in use.

PROCEDURE: Replace the 100 ohm resistor R63 on the servo board with a 150 ohm, 3 watt resistor (AN-0142EJF).

DATE: July 1, 1980

REVISION DATE: November 30, 1982

BULLETIN NO.: I/O:05

PRODUCT: 26-1157 WP50 Daisy Wheel Printer

SUBASSEMBLY: ART-2768/2769 Home and Ribbon Sensors

PURPOSE: To identify defective home and ribbon sensors.

DISCUSSION: The sensors used in the WP50 are made up of a light emitting diode (LED) and a photo resistor. In the home sensor the LED is directly across from the photo resistor and a flat piece of metal attached to carriage assembly is used to break the light beam. On power up the WP50 CPU looks for a low home signal. If the signal is not low the carriage is moved from right to left until the home signal is received. Then the carriage is moved from left to right until the home signal changes state from low to high. If the home sensor is shorted the printer CPU will slowly move the carriage to the right until it hits the right side of the printer. If the home sensor is open the CPU will move the carriage to the left until it hits the left side. In both cases the printer will go into an error mode.

In the ribbon sensors the LED and the photo resistor are side by side. On both ends of the ribbon there is a silver strip attached. When this strip is moved in front of the ribbon sensors the LED is reflected into the photo resistor and the sensor right or left signal is generated. On all three of these sensors the only thing in common is the LED drive voltage. All three LEDs have their cathodes tied to ground and their anodes tied to R59 which is tied to +12vdc. If one of the LEDs shorts out it effectively shorts out the voltage to all of them.

PROCEDURE: To test these sensors follow the procedure listed below.

WP50 SENSOR TEST PROCEDURE

Equipment required:

Multimeter
1.5 Volt Battery
100 Ohm Resistor
Clip on jumpers

1) Measure the front to back resistance ratio of the LED (refer to figure 1) using the R x 200K scale. The LED should read near infinity in one direction and approximately 160k ohms in the other. If it does not replace the sensor.

2) Connect the positive probe of the multimeter to pin 4 of the ribbon sensor and the negative probe to pin 3 (refer to figure 2). The meter should read infinity. If it does not the sensor is bad; replace it.

3) Connect the positive probe to pin 3 and the negative probe to pin 4 (refer to figure 2). Ambient light should be sufficient to cause a decrease in the ribbon sensor's resistance to approximately 90k ohms. By covering the sensor with a finger, the reading should change to infinity. If the sensor does not change then replace it. The carriage home sensor requires the LED to be activated in order to read the sensor. To activate the LED (refer to figure 1) connect the positive end of a 1.5v battery to the pin 1 (anode) of the sensor. Connect the negative end of the battery to a 100 ohm resistor and connect the resistor to pin 2 (cathode). Connect the positive probe of the multimeter to pin 3 and the negative probe to pin 4. By placing a piece of paper between the LED and the photo resistor a change should be noted. When the paper is inserted the meter should read infinity and when the paper is removed the meter should read approximately 90k ohms. If it does not, replace the sensor.

It is recommended that all new sensors be tested using this procedure prior to installation. When replacing the ribbon pay special attention to the name printed on them. There are two types of ribbon sensors: MCA7 and MEXICO. MCA7 ribbon sensors can only be used with the 702255-100 servo board and the MEXICO ribbon sensors can only be used with 7702255-101 servo board. National Parts is only stocking the home sensor (ART-2768), the MEXICO ribbon sensor (ART-2769), and the "-101" servo board (AXX-0319). When replacing the MCA7 ribbon sensors it will be necessary to replace the servo board also. Refer to Technical Bullentin I/O:07 for servo board identification

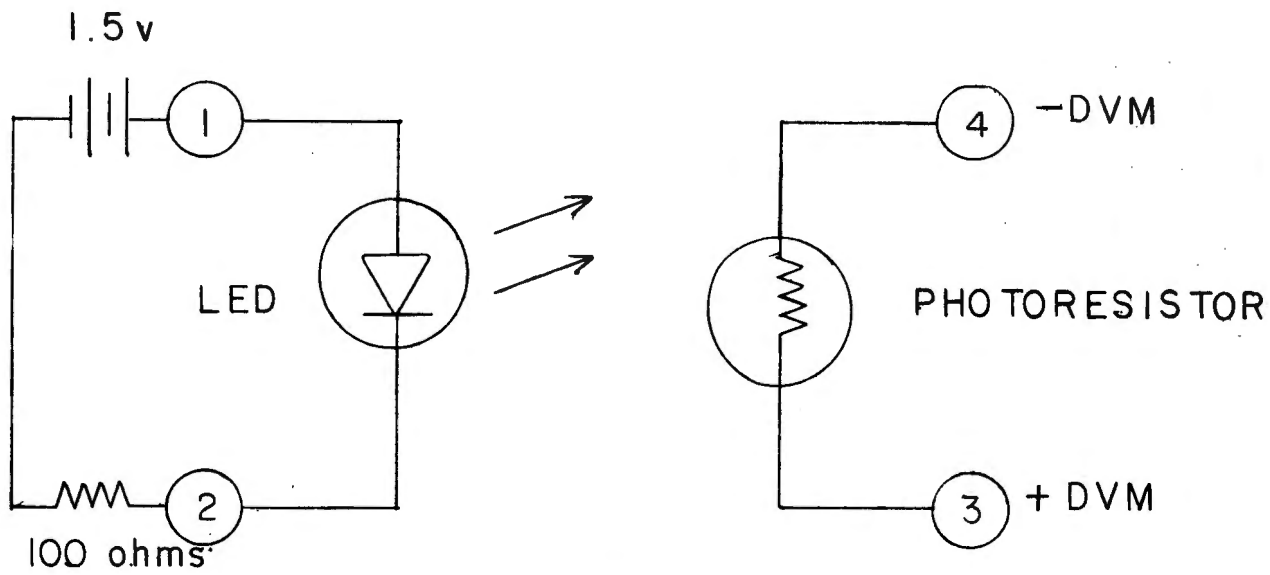

FIGURE 1

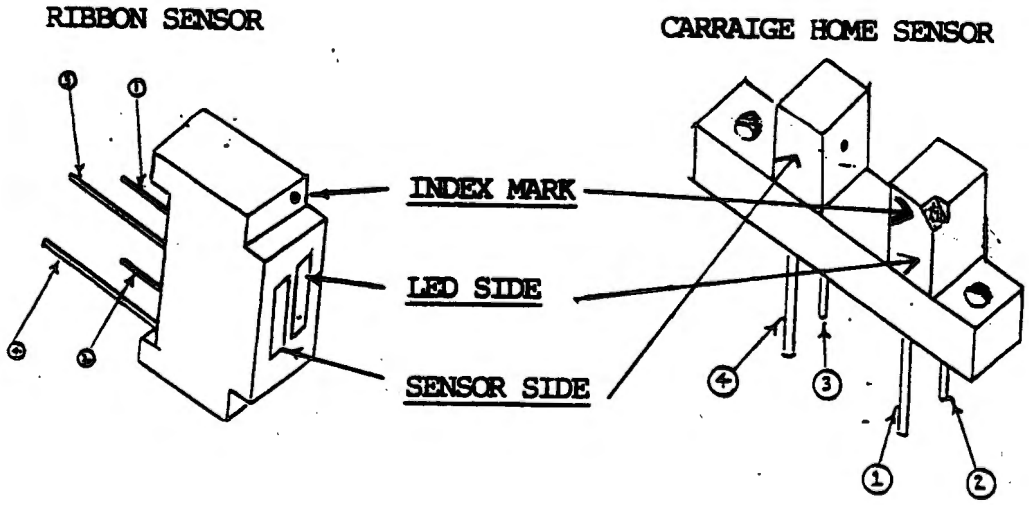

FIGURE 2

DATE: November 1, 1980

REVISION DATE: December 6, 1982

BULLETIN NO.: I/O:06

PRODUCT: 26-1157 WP50 Daisy Wheel Printer

SUBASSEMBLY: AXX-0319 Servo Board Revision 100 and 101

PURPOSE: Hammer intensity adjustment procedure.

DISCUSSION: The hammer intensity should be readjusted when ever components in the hammer circuit are replaced. On the right side of the hammer assembly is a part number followed by a revision letter. The hammer current for revision A, B, and C hammers is 3.2 ± .1 Amps. For revision D and E hammers the current is 3.6 ± .1 Amps.

PROCEDURE: Turn the printer power off. Connect a 1 to 1 scope probe to R21 (the end nearest VR1). Connect scope ground to the positive (+) end of C13 (logic ground). **DO NOT USE CHASSIS GROUND!**

Set the vertical deflection for .5 volts per division.
Set the horizontal sweep for 5 milliseconds per division.

Turn the printer power on. Set the scope input switch to ground and position the trace on the bottom line. Set the scope input switch to AC mode and start the printer self test. Each vertical division on the scope represents one ampere of hammer current. The scope pulse should be 1.5 to 2.2 milliseconds in duration and have an amplitude of 1.6 or 1.8 volts (3.2 or 3.6 divisions) depending upon the revision level of the hammer assembly. If the hammer intensity is not within specifications adjust VR1 to correct it.

DATE: August 14, 1980

REVISION DATE: December 7, 1982

BULLETIN NO.: I/O:07

PRODUCT: 26-1157 WP50 Daisy Wheel Printer

SUBASSEMBLY: AXX-0319 Servo Board Revision 100 and 101

PURPOSE: To identify servo board and platen motor combinations

---

DISCUSSION/PROCEDURE: There are two types of platen drive motors (line feed motors) currently installed in WP50 printers. The first is the "pancake" motor, so called because of its shape. It is approximately four inches in diameter and three quarters of an inch thick. The second type of motor is the "Pittman" motor, and it is more cylindrical in shape. It is approximately two inches in diameter and three inches long.

There are currently two types of servo boards in the field. The first has a serial number with a suffix of "-100", and is intended for use only with the "pancake" motor. The second board has the suffix of "-101", and will work with either motor. The serial number can be found on the corner of the servo board nearest the parallel connector. National Parts is presently stocking only the "-101" type board (AXX-0319) and the "Pittman" motor (AXX-4012). When replacing the platen motor it may also be necessary to replace the servo board due to the fact that the "Pittman" motor will not work with the "-100" type board.

DATE: February 24, 1981

REVISION DATE: December 7, 1982

BULLETIN NO.: I/O:08

PRODUCT: 26-1157 WP50 Daisy Wheel Printer

SUBASSEMBLY: AXX-0321 Parallel Interface Board

PURPOSE: To correct the printing of wrong characters, printer lock up, or carriage moving the wrong direction especially after service.

DISCUSSION/PROCEDURE: On some printers the cable going between the WP50 printer interface board and the parallel interface board has been caught in the hinge for the servo board and damaged. This can cause the loss of a data lines, control lines, or short out the power supply. When ever a WP50 is serviced, this cable should be checked for damage and dressed away from the hinge.

DATE: February 24, 1981

REVISION DATE: December 7, 1982

BULLETIN NO.: I/O:09

PRODUCT: 26-1157 WP50 Daisy Wheel Printer

SUBASSEMBLY: AXX-0321 Parallel Interface Board

PURPOSE: Parallel interface board schematic.

DISCUSSION/PROCEDURE: Also attached to this bulletin is the schematic for the parallel interface board. On it J1 connects to the computer and J2 connects to the serial interface board. Note that the signals change names between the input connector and the output connector. The signal names on J2 are for the serial version of the printer.

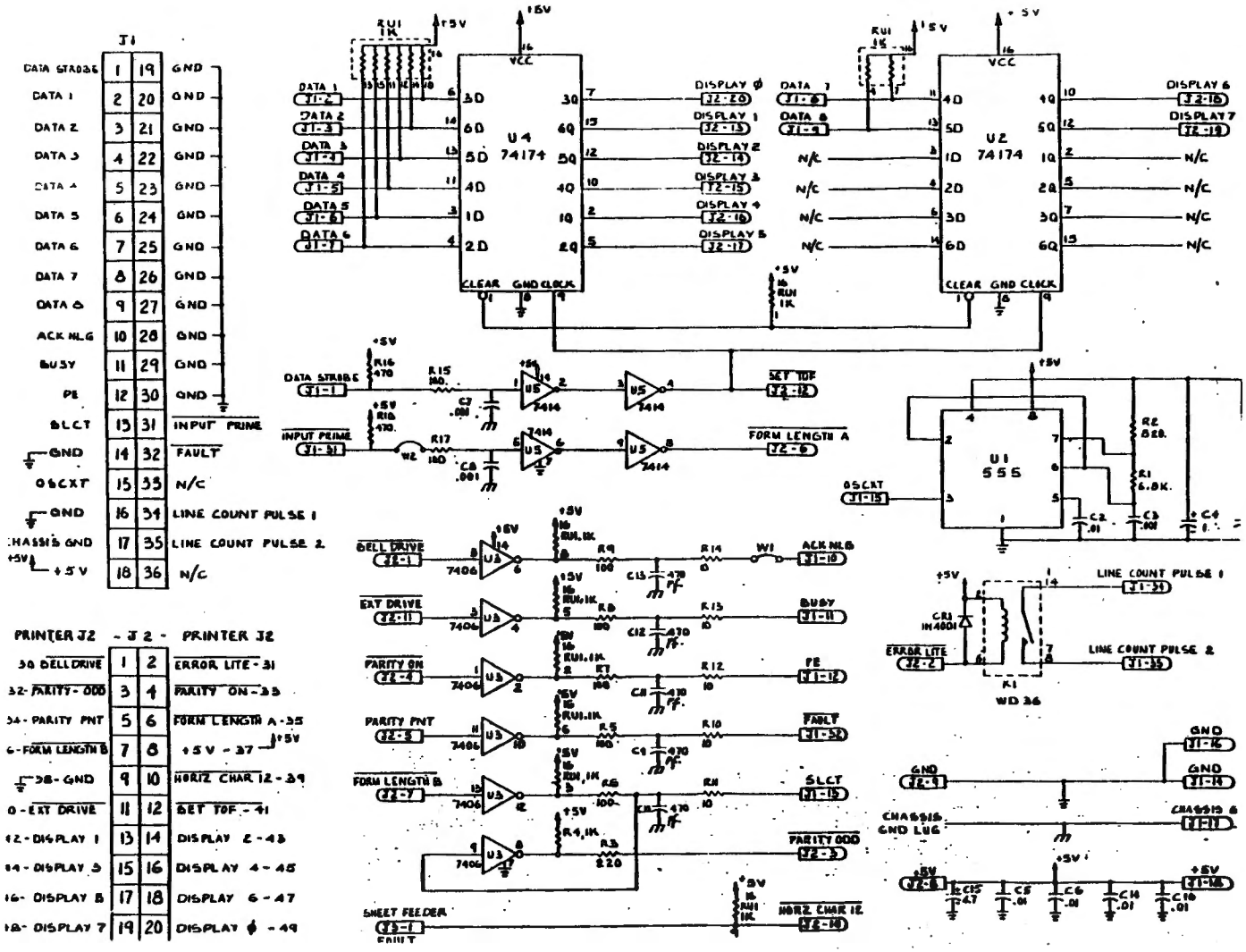
J1
DATA STROBE 1 19 GND
DATA 1 2 20 GND
DATA 2 3 21 GND
DATA 3 4 22 GND
DATA 4 5 23 GND
DATA 5 6 24 GND
DATA 6 7 25 GND
DATA 7 8 26 GND
DATA 8 9 27 GND
ACK NLG 10 28 GND
BUSY 11 29 GND
PE 12 30 GND
SLCT 13 31 INPUT PRIME
GND 14 32 FAULT
OSCXT 15 33 N/C
GND 16 34 LINE COUNT PULSE 1
CHASSIS GND 17 35 LINE COUNT PULSE 2
+5V 18 36 N/C
PRINTER J2 - J2 - PRINTER J2
30 BELL DRIVE 1 2 ERROR LITE - 31
32 - PARITY - ODD 3 4 PARITY ON - 33
34 - PARITY PNT 5 6 FORM LENGTH A - 35
6 - FORM LENGTH B 7 8 +5V - 37
38 - GND 9 10 HORIZ CHAR 12 - 39
0 - EXT DRIVE 11 12 SET TOF - 41
12 - DISPLAY 1 13 14 DISPLAY 2 - 43
14 - DISPLAY 3 15 16 DISPLAY 4 - 45
16 - DISPLAY 5 17 18 DISPLAY 6 - 47
18 - DISPLAY 7 19 20 DISPLAY 0 - 49
U4 74174
U2 74174
U1 555
U3 7406
U5 7414
DATA STROBE
INPUT PRIME
SET TOF
FORM LENGTH A
BELL DRIVE
EXT DRIVE
PARITY ON
PARITY PNT
FORM LENGTH B
SHEET FEEDER
ACK NLG
BUSY
PE
FAULT
SLCT
PARITY ODD
HORZ CHAR 12
LINE COUNT PULSE 1
LINE COUNT PULSE 2
ERROR LITE
CHASSIS GND LUG
GND
+5V

DATE: August 27, 1980

REVISION DATE: December 9, 1982

BULLETIN NO.: I/O:10

PRODUCT: 26-1157A Qume Printer

SUBASSEMBLY: N/A

PURPOSE: To identify printer control codes that can be used in BASIC.

DISCUSSION/PROCEDURE: The following BASIC print commands will set the printer to listed modes of operation:

MODE	COMMAND
Self test	LPRINT CHR$(27);CHR$(26);CHR$(14)
Reset (10 pitch, 6 lines/in.)	LPRINT CHR$(27);CHR$(26);"I"
Horizontal movement	
12 Pitch	LPRINT CHR$(27);"E";"10"
10 Pitch	LPRINT CHR$(27);"E";"12"
Graphics	LPRINT CHR$(27);"E";"01"
Vertical movement	
6 Lines per inch	LPRINT CHR$(27);"L";"08"
8 Lines per inch	LPRINT CHR$(27);"L";"06"
48 Lines per inch	LPRINT CHR$(27);"L";"01"

DATE: September 9, 1980

REVISION DATE: December 13, 1982

BULLETIN NO.: I/O:11

PRODUCT: 26-1157A Qume Printer

SUBASSEMBLY: Mother Board

PURPOSE: To disable auto line feed.

DISCUSSION/PROCEDURE: Auto line feed may be disabled on the Qume printer by cutting the jumper between pins 2 and 14 of P6 on the mother board. The plug, P6, is plugged into J6 on the left side of the mother board. This plug is a 16 pin DIP that has an obvious bare wire jumper across the two terminals. This jumper must be cut to disable auto line feed.

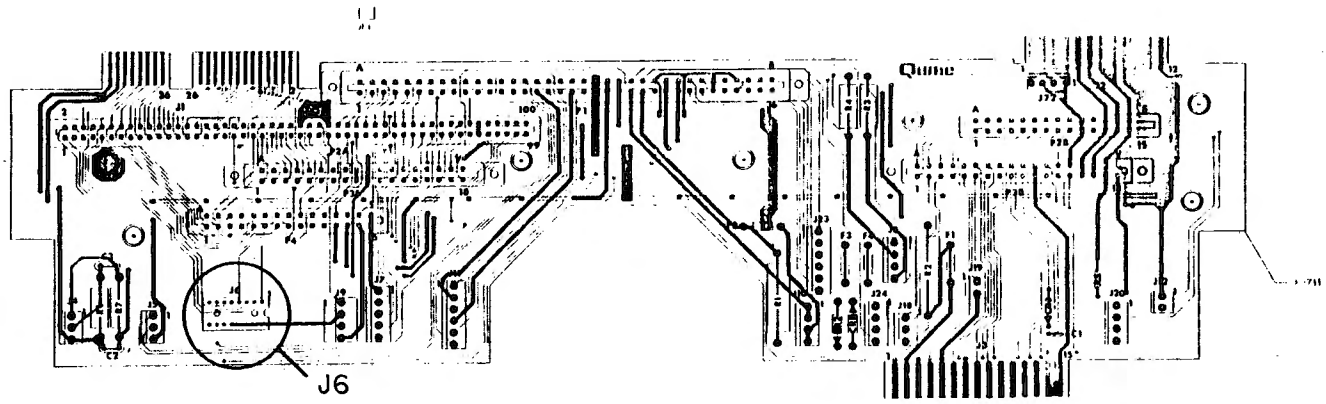

DATE: October 6, 1980

REVISION DATE: December 21, 1982

BULLETIN NO.: I/O:12

PRODUCT: 26-1157A Qume Printer

SUBASSEMBLY: AW-2542 Interface Connector Cable

PURPOSE: To correct missing characters on the Qume printer.

DISCUSSION/PROCEDURE: The interface cable on the Qume printer has been causing various problems. This cable should be checked if printing problems are occurring. The protective cover that holds the cable on the printer should not be installed tightly as it will crimp the cable and short out the data lines.

National Parts number AW-2542 may be used as a replacement for the interface cable. If it is used be sure to check that pin 10 and pin 11 of the CHAMP 36 pin connector are tied together. Some of these cables have been received from the vendors with these two pins not jumpered.

DATE: January 12, 1981

REVISION DATE: December 30, 1982

BULLETIN NO.: I/O:13

PRODUCT: 26-1154A Line Printer IIA

SUBASSEMBLY: MS260-1154A Service Manual

PURPOSE: To correct errors in service manual.

DISCUSSION: Two pages in the Line Printer IIA service manual contain errors. Page 8-3 should be replaced with the attached sheet. On page 7-2 the transformer should be designated T-1.

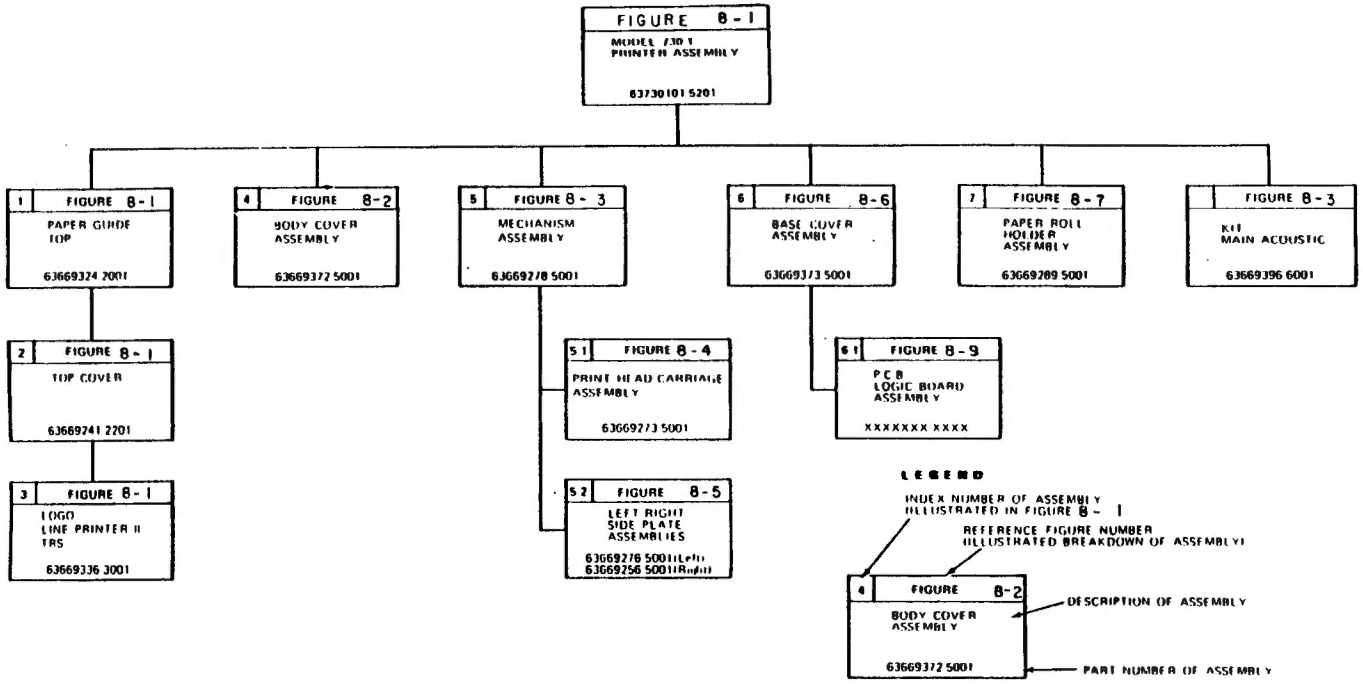
FIGURE 8-1
MODEL 730 1
PRINTER ASSEMBLY
63730101 5201
1 FIGURE 8-1
PAPER GUIDE
TOP
63669324 2001
2 FIGURE 8-1
TOP COVER
63669741 2201
3 FIGURE 8-1
LOGO
LINE PRINTER II
TRS
63669336 3001
4 FIGURE 8-2
BODY COVER
ASSEMBLY
63669372 5001
5 FIGURE 8-3
MECHANISM
ASSEMBLY
63669278 5001
5 1 FIGURE 8-4
PRINT HEAD CARRIAGE
ASSEMBLY
63669273 5001
5 2 FIGURE 8-5
LEFT RIGHT
SIDE PLATE
ASSEMBLIES
63669278 5001(Left)
63669256 5001(Right)
6 FIGURE 8-6
BASE COVER
ASSEMBLY
63669373 5001
6 1 FIGURE 8-9
PCB
LOGIC BOARD
ASSEMBLY
XXXXXXX XXXX
7 FIGURE 8-7
PAPER ROLL
HOLDER
ASSEMBLY
63669289 5001
FIGURE 8-3
KIT
MAIN ACOUSTIC
63669396 6001
LEGEND
INDEX NUMBER OF ASSEMBLY
ILLUSTRATED IN FIGURE 8- 1
REFERENCE FIGURE NUMBER
ILLUSTRATED BREAKDOWN OF ASSEMBLY
4 FIGURE 8-2
BODY COVER
ASSEMBLY
63669372 5001
DESCRIPTION OF ASSEMBLY
PART NUMBER OF ASSEMBLY

DATE: February 20, 1981

REVISION DATE: December 30, 1982

BULLETIN NO.: I/O:14

PRODUCT: 26-1159 Line Printer IV

SUBASSEMBLY: AXX-0326 Logic Board

PURPOSE: Carriage speed adjustment procedure.

DISCUSSION: Improperly adjusted carriage speed can sometimes cause missing dots. This may show up in proportional or condensed modes only.

PROCEDURE: To properly adjust carriage:

1) Use a routine to print 80 spaces per line continuously such as:

```
 5 CLEAR 100
10 LPRINTCHR$(80,32)
20 GOTO10
```

2) Connect a scope probe to TP1 or ME3, pin 6 (column sense pulses). Ground the probe at TP2. When carriage is moving forward adjust R59 for a time interval of 2.0 to 2.1 milliseconds between pulses.

DATE: June 5, 1980

REVISION DATE: December 30, 1982

BULLETIN NO.: I/O:15

PRODUCT: 26-1156A Line Printer IIIA

SUBASSEMBLY: AXX-0314 Controller Board

PURPOSE: To enable the optional character set.

DISCUSSION: The "A" version of the Line Printer III has two character sets; "ASCII code" and "Tandy code". The factory setting has the "ASCII code" enabled. To enable the optional character set ("Tandy code") follow the procedure below. The following table illustrates the difference between the "ASCII code" and "Tandy code" (optional character set):

Hex code	"Tandy code" characters	"ASCII code" characters
5B	Up arrow	Left square bracket
5C	Down arrow	Backwards slash
5D	Left arrow	Right square bracket
5E	Right arrow	Up arrow
5F	Underscore	Left arrow

It is necessary to disable the automatic line feed with carriage return in order to underscore text (to underscore, the line of text must first be printed, then without a line feed the underscore character must be printed). To disable auto line feed change dip switch 4 to the closed position. **THIS CHANGE MAKES THE PRINTER INCOMPATIBLE WITH RADIO SHACK SOFTWARE!!** Refer to Technical Bulletin I/O:16 for further details regarding the auto line feed with carriage return.

PROCEDURE: To enable the optional character set, install a jumper wire across the pads in position J202. Note: When this jumper is installed the "ASCII codes" for 5B to 5F are no longer available. To check out the modification run the following test to ensure that the correct character set is enabled:

```
10 LPRINT"TEST";:FORX=1TO10:LPRINTCHR$(95);:NEXTX:END
```

This should print the word TEST, followed by either 10 left arrows or 10 underscore marks, according to which character set is enabled.

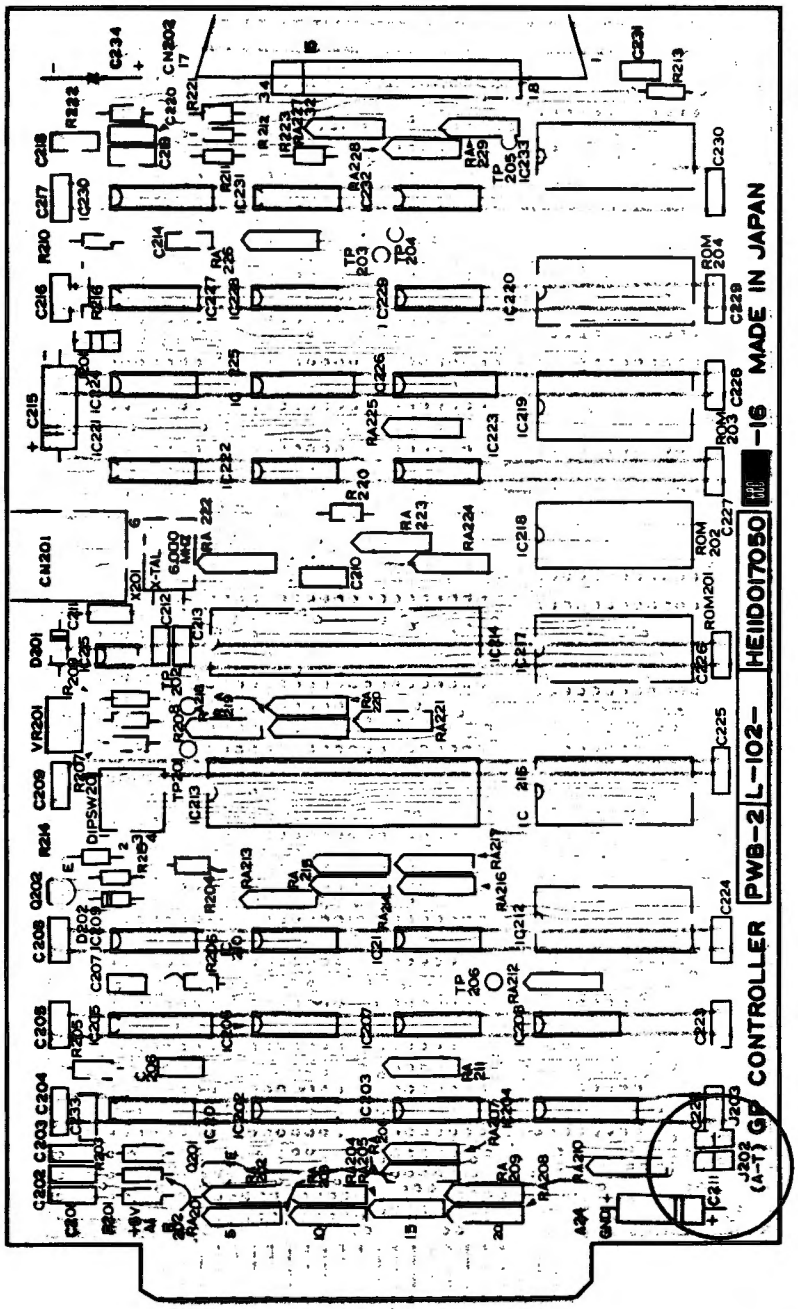
GP CONTROLLER
PWB-2 L-102- HEIID017050
-16 MADE IN JAPAN

DATE: June 5, 1980

REVISION DATE: January 3, 1983

BULLETIN NO.: I/O:16

PRODUCT: 26-1156/1156A Line Printer III/IIIA

SUBASSEMBLY: AXX-0314 Controller Board

PURPOSE: To disable auto line feed.

PROCEDURE/DISCUSSION: The Line Printer III/IIIA as shipped from the factory will automatically perform a line feed when a carriage return is received. This is required to make the printer compatible with Radio Shack software. Some customers, however, may wish to use the printer without the auto line feed. Set Dip switch DIP SW201 (located at the top of the controller board) as follows:

26-1156 Position #4
26-1156A Position #3

In the open position, line feed and a carriage return will be executed upon receipt of a carriage return.
In the closed position, only a carriage return will be executed upon receipt of a carriage return.

When auto line feed is disabled the printer is no longer compatible with Radio Shack software.

DATE: October 22, 1981

REVISION DATE: January 27, 1983

BULLETIN NO.: I/O:17

PRODUCT: 26-1165 Line Printer V

SUBASSEMBLY: AXX-0341 Logic Board

PURPOSE: To correct unexplained lockups of the Line Printer V.

DISCUSSION: C9 was installed incorrectly at the time of manufacture. C9 is the capacitor tied to ground in the reset circuit. Hitting reset on the printer can cause the Line Printer V to glitch itself, thus it never returns from reset. Most Line Printer V's will not have this problem due to the tolerance of IC6. This modification should installed in all Line Printer V's before date code 8A1. **Do not do this modification to printers with date codes after 8A1, because they already have this modification installed.**

PROCEDURE: Remove C9 from the logic board in the printer. Install a .1 uf capacitor between pins 36 and 39 of IC6.

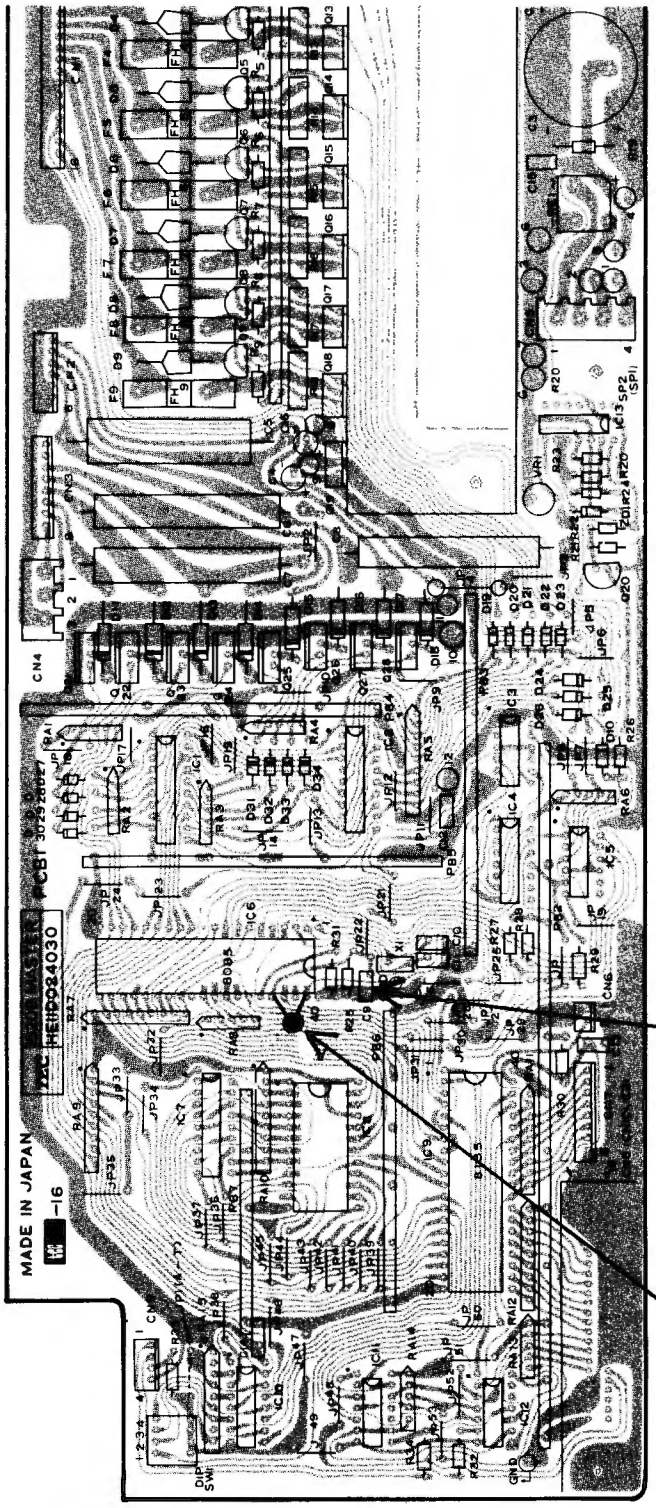
MADE IN JAPAN
-16
REMOVE
INSTALL
CAPACITOR

DATE: January 12, 1981

REVISION DATE: January 26, 1983

BULLETIN NO.: I/O:18

PRODUCT: 26-1166 Line Printer VI

SUBASSEMBLY: AXX-0327 Logic Board

PURPOSE: To correct loud singing noise in line feed motor.

DISCUSSION: Some line feed motors on early models of the Line Printer VI make loud singing noises. These models can be identified by locating D34, D36, D38, and D40. If these diodes are present the modification must be done. If the designators are not present then that board is a newer version of the board and the loud singing noise has been corrected through software.

PROCEDURE: To correct the problem remove D34, D36, D38, and D40. Install one 1.5mfd, 100v polyester film capacitor (ACC-155KLGP) between the anodes of D35 and D37. Install another capacitor (same value) between the anodes of D39 and D41.

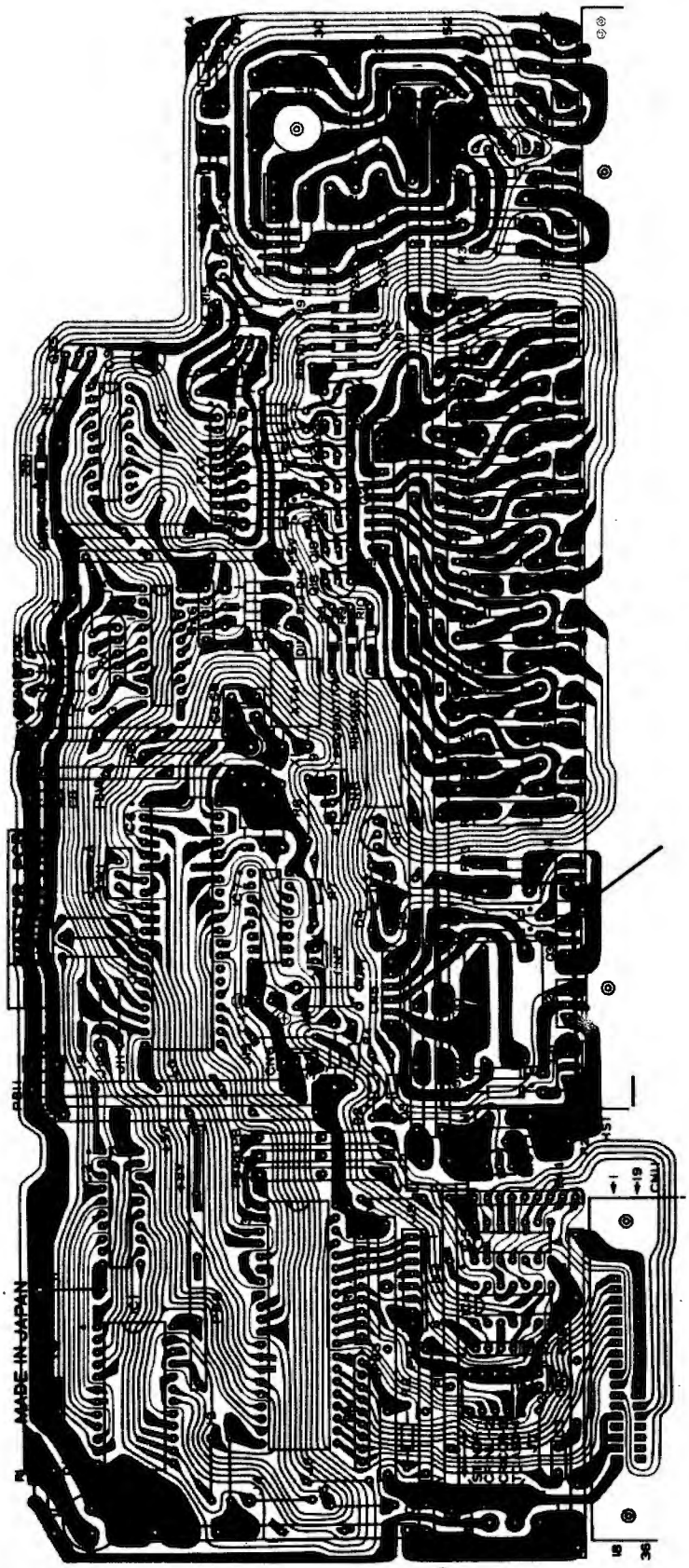
MADE IN JAPAN
AFFECTED AREA

DATE: January 14, 1982

REVISION DATE: January 27,1983

BULLETIN NO.: I/O:19

PRODUCT: 26-1167 Line Printer VII

SUBASSEMBLY: N/A

PURPOSE: To correct poor print quality.

PROCEDURE/DISCUSSION: When the upper or lower dots of the printed characters are missing or being, clipped perform the Dot Sensor Adjustment on page 22 of the service manual.

1) Loosen the 2 screws which hold the dot sensor in place.
2) If the upper dots of the characters are missing, move the dot sensor towards the back of the printer until all the dots are printed properly.
3) If the lower dots of the characters are missing, move the dot sensor towards the front of the printer until all the dots are printed properly.
4) Tighten down the two screws which hold the dot sensor in place.

When the printer appears to print garbage instead of the proper characters (refer to figure 1 on page 2) perform the following steps.

1) Remove the gear pin from the rotation detector. This pin holds the rotation detector on the motor shaft.
2) Pull the rotation detector far enough down the motor shaft so that it is no longer coupled to the reduction gear.
3) By turning the platen gear, rotate the platen until one of the ridges is in the horizontal position (see figure 2 on page 2).
4) Turn the rotation detector until seven of the holes around its edge are lined up between the two dot sensor screws.
5) Slide the rotation detector down the motor shaft (making sure the the platen doesn't move) until it is coupled to the reduction gear.
6) Turn the rotation detector until the holes for the gear pin line up with the holes in the motor shaft, then reinsert the gear pin. When turning the rotation detector the whole gear assembly will also turn, including the platen. This is normal and will not affect the adjustment that has just been performed.
7) Perform the Dot Sensor Adjustment.

Instead of printing out the letter "E", the printer prints out one of the following, or a combination of any of the three.

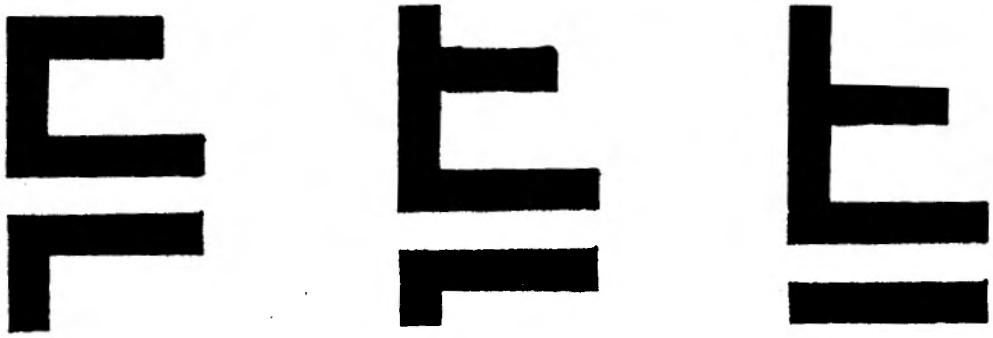

From these examples you can see that the printer did try to print out the letter "E", but because of the improper timing between the platen and the rotation detector, they were not printed properly.

Figure 1

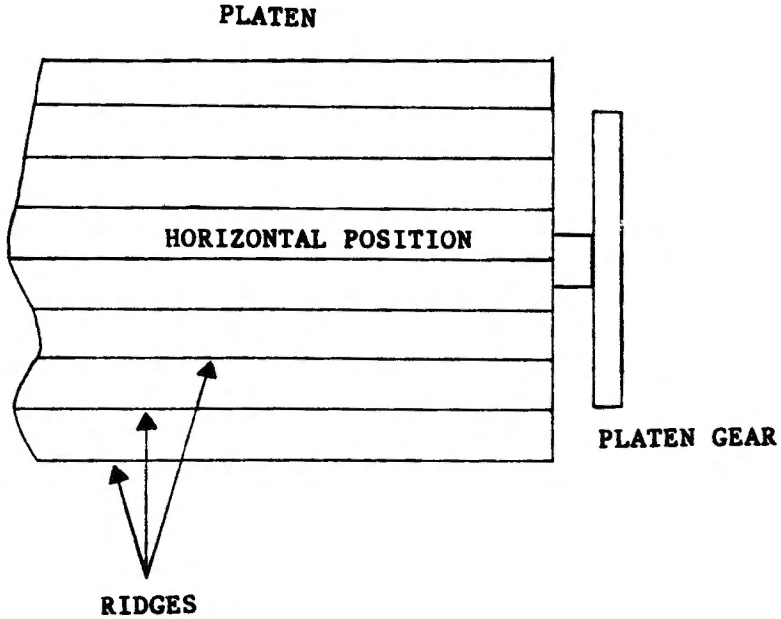

Figure 2

DATE: March 30, 1982

REVISION DATE: February 4, 1983

BULLETIN NO.: I/O:20

PRODUCT: 26-1167 Line Printer VII

SUBASSEMBLY: AX-8731/9269 Logic Board

PURPOSE: To identify the different logic boards for the Line Printer VII.

DISCUSSION/PROCEDURE: When ordering the AX-8731 it is possible to receive one of five logic boards. The boards are identified by a number stamped at the bottom of the boards. The numbers are MB-1, MB-2, MB-3, MB-4, and MB-5 (modified). The MB-1 through MB-4 are physically and electronically the same. The modified MB-5 is electronically the same, but physically different. This board has two cuts and two jumpers on the solder side. All five versions of this board have a MB8881N-122 processor installed. The rotation detector used with these boards has three groups of holes around its outside edge (see figure 1). This rotation detector can only be used with the MB8881N-122 processor.

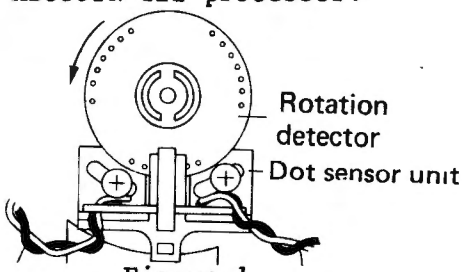

Figure 1

When ordering the AX-9269 an unmodified MB-5 logic board should be received. The MB-5 received should have no cuts or jumpers and have a MB8881N-157 processor installed. The rotation detector used has hole all the around its outside edge (see figure 2). This rotation detector can only be used with the MB8881N-157 processor.

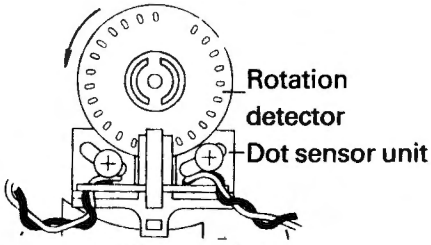

Figure 2

DATE: October 29, 1981

REVISION DATE: February 7, 1983

BULLETIN NO.: I/O:21

PRODUCT: 26-1167 Line Printer VII

SUBASSEMBLY: N/A

PURPOSE: To correct improper head movement.

DISCUSSION/PROCEDURE: If the print head fails to move all the way to the right when printing, turn off the printer when the head stops moving. Pull the feed drum unit to the right, disengaging the coupling, and rotate it a maximum of four teeth towards the back of the printer. Release the feed drum unit. Pull the clutch assembly to the right, disengaging the coupling, and move the print head all the to the right by rotating the clutch assembly. Turn on the printer and check for proper operation. If the printer still fails to move all the way to the right, repeat the above procedure.

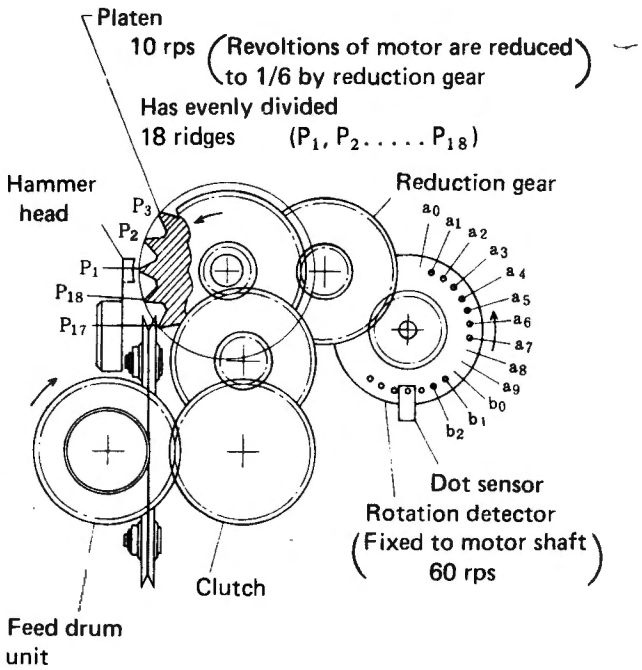

If the print head fails to move all the way home after printing, turn off the printer when the head stops moving. Pull the feed drum unit to the right, disengaging the coupling, and rotate it a maximum of four teeth towards the front of the printer. Release the feed drum unit. Pull the clutch assembly to the right, disengaging the coupling, and move the print head to the home position by rotating the clutch assembly. Turn on the printer and check for proper operation. If the printer still fails to move all the way home, repeat the above procedure.

After performing the above procedures, check to ensure that the characters are not being clipped off. If they are, perform the Dot Sensor adjustment.

DATE: December 29, 1981

REVISION DATE: February 7, 1983

BULLETIN NO.: I/O:22

PRODUCT: 26-1168 Line Printer VIII

SUBASSEMBLY: N/A

PURPOSE: To correct the problem of the Alert light coming on at power up.

DISCUSSION/PROCEDURE:. When the printer is powered up with the position detector bent, the carriage goes to the right and then to the left, but stops before reaching the home sensor and the Alert light comes on. During shipping the print head is pushed into one or both of the position detector switches on either side of the carriage assembly. This causes the position detector to become bent. With the detector bent the switch will either not be activated at all or will be activated too late. This will cause the printer to think the switch is faulty or the carriage is stuck. To correct this problem the two tabs should be parallel and straight up and down. Before shipping any Line Printer VIII be sure the carriage is secured and the position detector is not pressing against either of the switches. The only time that the printer normally uses these switches is on power up. If one of the switches is hit during printing the printer will go into check (ALERT).

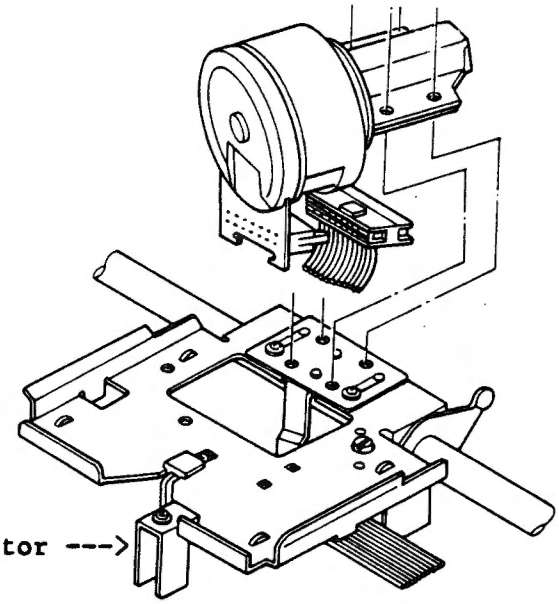

DATE: November 23, 1981

REVISION DATE: March 14, 1983

BULLETIN NO.: I/O:23

PRODUCT: 26-1158 Daisy Wheel II Printer

SUBASSEMBLY: AM-4584 Line Feed Motor

PURPOSE: Replacement procedure for the Daisy Wheel line feed motor.

PROCEDURE: To remove and replace the line feed motor follow these steps:

1) Remove the platen and then loosen the two screws which hold the top case in place. Carefully disconnect the cable going to the front panel switches as you remove the top case.

2) Set the unit upright so that it rests on the heat sink located on the back of the printer. Remove the four screws that attach the bottom case to the main chassis (these screws are located in the recessed rubber grommets). Carefully remove the printer bottom case.

3) Remove the three phillip head screws that hold the line feed stepper motor in place. Remove the stepper motor as a complete assembly. There is no need to remove the idler gear until the motor is removed from the printer. Be careful not to loose the standoffs that are under the stepper motor.

4) Remove the nut that holds the idler gear in place. Reinstall the idler gear on the new line feed motor. Be sure not to loose the lubrication pad on the motor shaft.

5) Install the new line feed motor using the standoffs and the three phillip head screws.

6) Reinstall the top and bottom case. Reinstall the platen. Test the printer for proper operation.

DATE: February 12, 1982

REVISION DATE: March 14, 1983

BULLETIN NO.: I/O:24

PRODUCT: 26-1448 Sheet Feeder for Daisy Wheel II

SUBASSEMBLY: AXX-0343 Main logic board (late)

PURPOSE: To allow the Sheet Feeder interface board to be used on the new Daisy Wheel II.

DISCUSSION/PROCEDURE: Test pins 1 and 2 on the newer processor boards are longer and interfere with the interface PCB. These pins should be cut down enough to allow the interface PCB to fit correctly on CN20.

DATE: August 2, 1982

REVISION DATE: March 14, 1983

BULLETIN NO.: I/O:25

PRODUCT: 26-1158 Daisy Wheel II

SUBASSEMBLY: AX-8629 Select Preamplifier Board

PURPOSE: To correct loose connections on the Select and Space Preamplifier board.

DISCUSSION: Intermittently the printer goes into check and the select or space lamp comes on with or without the hunt lamp.

PROCEDURE: Check the connections on the select and space preamplifier board. The select preamplifier is located in the white box under the select motor and the space preamplifier is located in the white box behind the space motor. When loose they can cause pulses coming from the encoder disk to be lost or sometimes generate extra pulses. These connections should be checked and tightened by unplugging the connector, squeezing it, and then plugging it back on.

DATE: June 24, 1982

REVISION DATE: March 14, 1983

BULLETIN NO.: I/O:26

PRODUCT: 26-1158 Daisy Wheel II Printer

SUBASSEMBLY: Interchangeable Print Wheels

PURPOSE: To describe the symptoms of a defective Print Wheel.

DISCUSSION: A defective Daisy Wheel II print wheel may cause the characters to be unevenly spaced or cause some characters to be close together while others are far apart. On the back of the print wheel there is a an "X" shaped plastic bracket (pointed to by the arrow in the illustration) which mates with the "setter" on the carriage assembly. If this is loose it will allow the the petals on the print wheel to slip a small amount in either direction. This will cause uneven character spacing. This occurs the most in print wheels that have been in use for some time. New print wheels have also been found to be defective. Before assuming that there is a mechanical or electrical problem be sure to check for a defective print wheel.

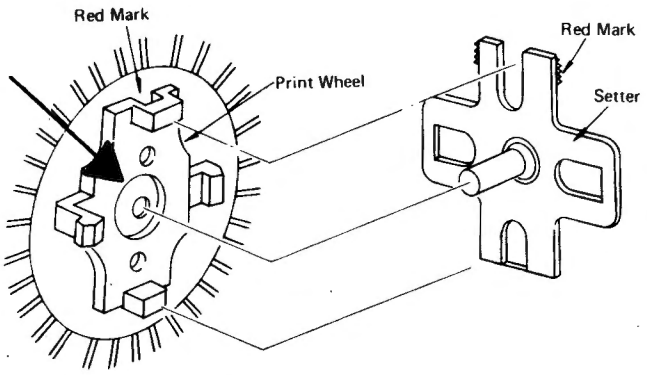

DATE: August 4, 1982

REVISION DATE: March 14, 1983

BULLETIN NO.: I/O:27

PRODUCT: 26-1260 Envelope Feeder for Daisy Wheel II

SUBASSEMBLY: N/A

PURPOSE: Envelope Feeder adjustment procedure.

DISCUSSION: The envelope feeder needs adjustment if it does not feed the envelope far enough out of the hopper or more than one envelope is fed out.

PROCEDURE: Adjustments for the envelope feeder.

If the envelope does not clear the 2 hard plastic rollers (A) or envelopes feed crooked, then these rollers need adjusting. They should be in good contact with the larger softer rubber rollers behind them. The easiest way to make the adjustment is to remove the plastic rollers and bend the chrome sheet metal so that when the rollers are put back in, they make good contact with the rubber rollers behind them. After doing this adjustment, the envelopes may start hitting the rollers and jamming the feeder. To correct this, bend the metal around the rollers that deflects the envelopes so that they do not hang up but feed between the 2 sets of rollers.

If the rollers are making good contact but the envelopes still do not clear the rollers then the end of envelope sensor (B) may need adjusting. To adjust, loosen the two screws that hold the sensor and move it downward so that when the motor shuts off the envelope clears the rollers.

If more than one envelope feeds at the same time the rubber piece behind the chrome sheet metal (C) may need replacing or adjusting. This piece allows only one envelope to be fed to the printer at a time out of the hopper.

Checking these three areas should correct most envelope feeder problems.

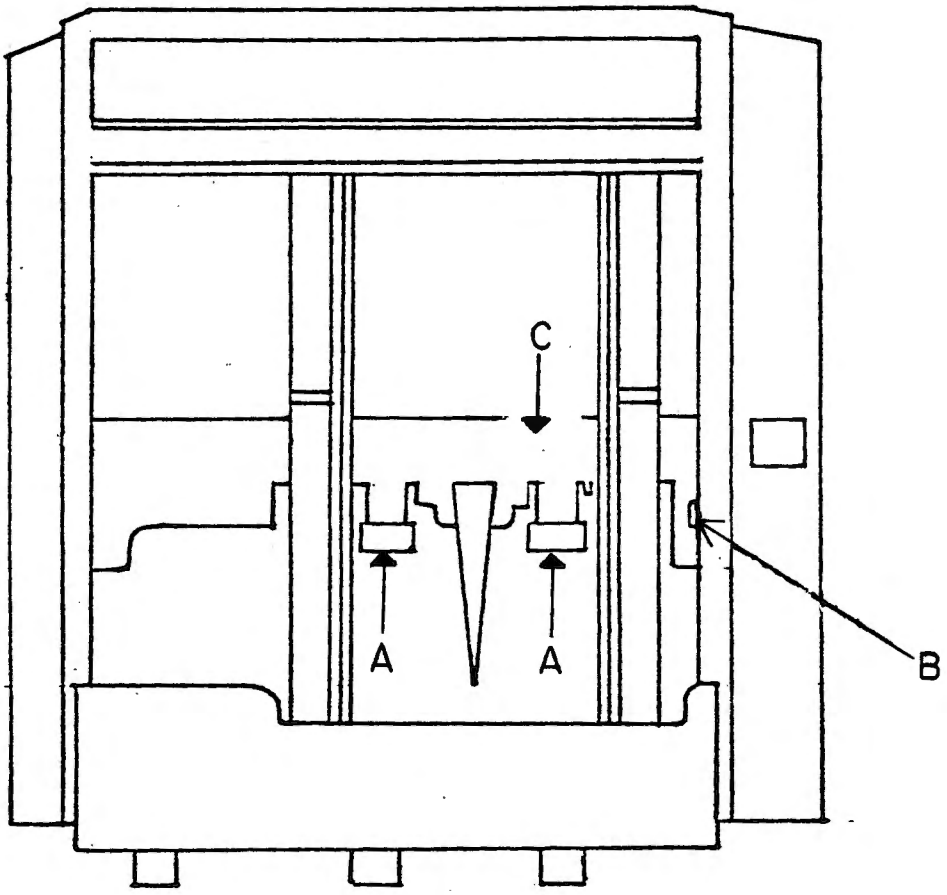
C
A
A
B

DATE: February 24, 1981

REVISION DATE: March 14, 1983

BULLETIN NO.: I/O:28

PRODUCT: 26-1158 Daisy Wheel II Printer

SUBASSEMBLY: AXX-0329/0343 Main Logic board

PURPOSE: To identify and explain test points 1, 2, 3, and 4 on main logic board.

DISCUSSION/PROCEDURE: Test point #1 is ground. Test point #2 controls the error protect software routines. Shorting test point #1 and #2 will disable the error protect software keeping the Daisy Wheel II from looking for time errors or hunt errors. For example, when the select sensor board is misadjusted to the point where it causes the printer to go into check, test points 1 and 2 can be shorted so the printer will run allowing for the adjustment of the board.

Test point #3 is ground. Test point #4 controls the optimizer software. Shorting test point #3 to #4 will disable the software optimizer for line feeds and carriage returns.

Normal configuration for these test points is all positions open.

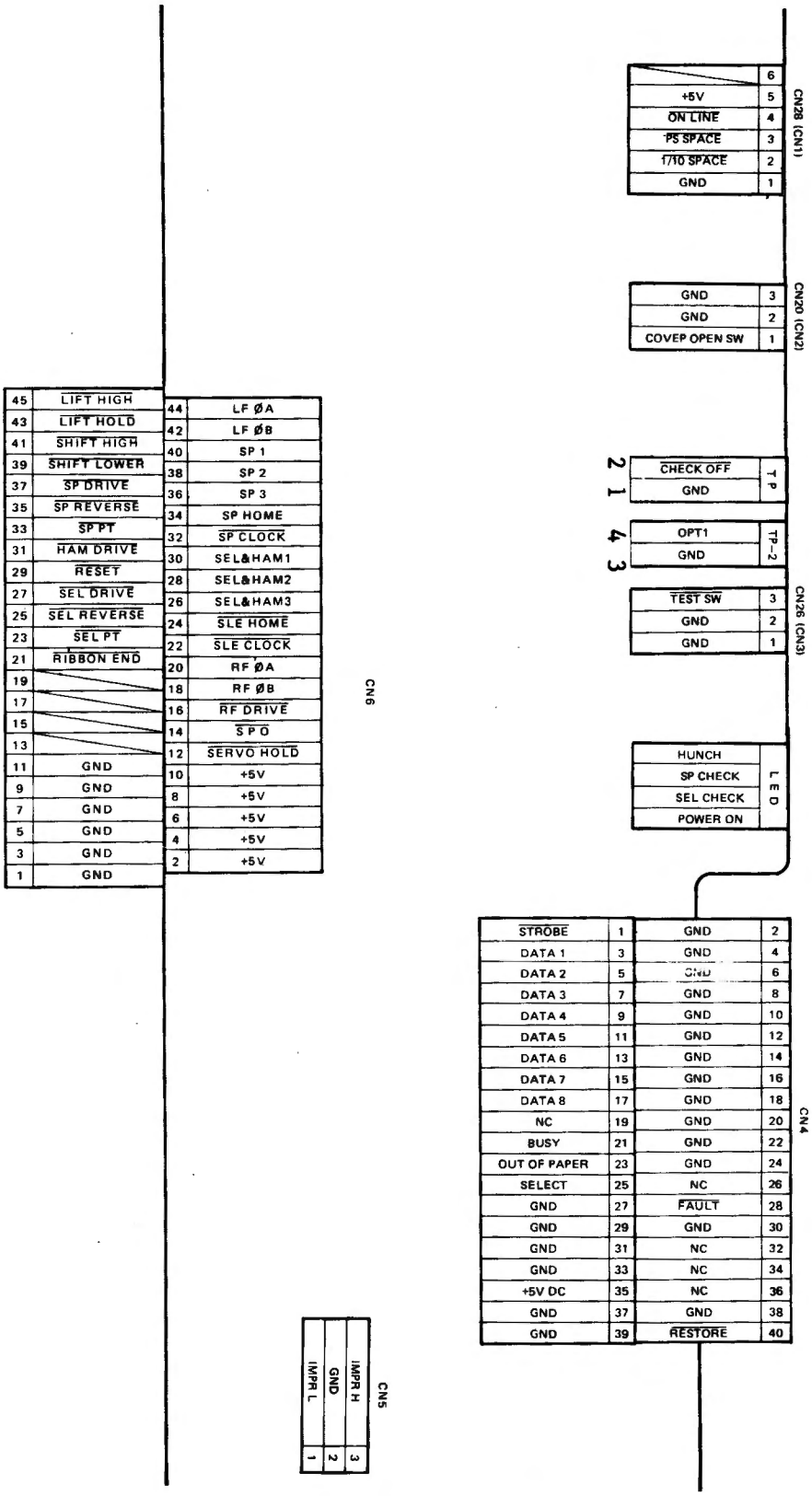
CN28 (CN1)
6
+5V 5
ON LINE 4
PS SPACE 3
1/10 SPACE 2
GND 1
CN20 (CN2)
GND 3
GND 2
COVEP OPEN SW 1
TP
CHECK OFF
GND
TP-2
OPT1
GND
CN26 (CN3)
TEST SW 3
GND 2
GND 1
LED
HUNCH
SP CHECK
SEL CHECK
POWER ON
CN6
45 LIFT HIGH
43 LIFT HOLD
41 SHIFT HIGH
39 SHIFT LOWER
37 SP DRIVE
35 SP REVERSE
33 SP PT
31 HAM DRIVE
29 RESET
27 SEL DRIVE
25 SEL REVERSE
23 SEL PT
21 RIBBON END
19
17
15
13
11 GND
9 GND
7 GND
5 GND
3 GND
1 GND
44 LF ØA
42 LF ØB
40 SP 1
38 SP 2
36 SP 3
34 SP HOME
32 SP CLOCK
30 SEL&HAM1
28 SEL&HAM2
26 SEL&HAM3
24 SLE HOME
22 SLE CLOCK
20 RF ØA
18 RF ØB
16 RF DRIVE
14 SPO
12 SERVO HOLD
10 +5V
8 +5V
6 +5V
4 +5V
2 +5V
CN4
STROBE 1 GND 2
DATA 1 3 GND 4
DATA 2 5 GND 6
DATA 3 7 GND 8
DATA 4 9 GND 10
DATA 5 11 GND 12
DATA 6 13 GND 14
DATA 7 15 GND 16
DATA 8 17 GND 18
NC 19 GND 20
BUSY 21 GND 22
OUT OF PAPER 23 GND 24
SELECT 25 NC 26
GND 27 FAULT 28
GND 29 GND 30
GND 31 NC 32
GND 33 NC 34
+5V DC 35 NC 36
GND 37 GND 38
GND 39 RESTORE 40
CN5
IMPR L 1
GND 2
IMPR H 3

 COPYRIGHT © 1987

DATE: December 8, 1981

REVISION DATE: October 15, 1987

BULLETIN NO: I/O:29

PRODUCT: 26-1448 Sheet Feeder for Daisy Wheel II
26-1260 Envelope Feeder for Daisy Wheel II

SUBASSEMBLY: AX-9107 Logic PCB (Sheet Feeder only)

SUBASSEMBLY REVISION: All Revisions

PURPOSE: To describe correct connection points for the sheet/envelope feeder interface board, and to describe damage caused to the sheet feeder interface board when it is improperly connected.

DISCUSSION/PROCEDURE: When attaching a Sheet Feeder or an Envelope Feeder to a Daisy Wheel II, you must connect three wires from the feeder interface board to the lower right-hand corner of the Daisy Wheel II power board. The correct connection points are described below. Note that the positions of the correct terminals may vary, so you must identify them by their labels.

Interface Connection	Power Board Terminal
red or white wire	+5V(M)
green wire	+15V(T) or +15V(H)
black wire	GROUND

*** Do not use the +15(L), +15V(R), or any -15V terminal. ***

On the 26-1448 Sheet Feeder only: If the +15V(H) wire has has been connected to a -15 volt terminal, the following damage will result. Capacitors C2 (6.8 uF, 20V) and C1 (15 uF, 20V) will short out, which usually destroys transistors T3 and T4 (BC-337). Sometimes transistors T1 and T2 (BC-517) are also burned out. This usually causes power to the entire printer to be lost. If you have this problem, first check your connections and then these components.

NOTE: The capacitor values given in the parts list are acceptable replacement values for C1 and C2. Some boards will have caps with other values at these locations, and these need not be changed unless they are damaged.

DATE: Decemder 08, 1981

REVISION DATE: February 20, 1984

BULLETIN NO.: I/O:29

PRODUCT: 26-1448 Sheet Feeder for Daisy Wheel II

SUBASSEMBLY: N/A

PURPOSE: To describe damage caused when the sheet feeder interface board is improperly connected.

DISCUSSION/PROCEDURE: Some sheet feeders have been hooked up with their + 15 V H wire going to the - 15 volt terminal. This shorts out capacitors C2 (6.8 uf at 20V) & C1 (15 uf at 20V) and usually destroys transistors T3 & T4 (BC-337). Soometimes transistors T1 & T2 (BC-517) are also burned out. When this happens power to the entire printer is usually lost. If you have this problem check your connections first and then these components. **There is more than one version of the power board; so go by the markings on the board for the power supplies.**

C1	15 uf 20 volt	CC-156JCTP	
C2	6.8 uf 20 volt	CC-683JETP	26-9999C
T1,T2	BC-517	AMX-4983	
T3,T4	BC-337	AMX-4984	
ICB	MK3870	AMX-4985	

DATE: December 08, 1981

REVISION DATE: March 14, 1983

BULLETIN NO.: I/O:29

PRODUCT: 26-1448 Sheet Feeder for Daisy Wheel II

SUBASSEMBLY: N/A

PURPOSE: To describe damage caused when sheet feeder interface board is improperly connected.

DISCUSSION/PROCEDURE:. Some sheet feeders have been hooked up with their + 15 V H wire going to the - 15 volt terminal. This shorts out capacitors C2 (6.8 uf at 20V) & C1 (15 uf at 20V) and usually destroys transistors T3 & T4 (BC-337). Sometimes transistors T1 & T2 (BC-517) are also burned out. When this happens power to the entire printer is usually lost. If you have this problem check your connections first and then these components. **There is more than one version of the power board; so go by the markings on the board for the power supplies.**

C1	15 uf 20 volt	CC-156JGAP
C2	6.8 uf 20 volt	CC-683JJTP
T1,T2	BC-517	AMX-4983
T3,T4	BC-337	AMX-4984
ICB	MK3870	AMX-4985

DATE: December 8, 1983

REVISION DATE: May 13, 1983

BULLETIN NO.: I/O:30

PRODUCT: 26-1448 Sheet Feeder for Daisy Wheel II

SUBASSEMBLY: N/A

PURPOSE: Test procedures for the Daisy Wheel II Sheet Feeder.

DISCUSSION/PROCEDURE:

This is a program to check the sheet feeder for alignment from page to page.

```
30 CLS
40 PRINT:PRINT"SHEET FEEDER SHOULD BE SET TO 13 "
50 PRINT"PRESS RESET ON THE FEEDER AND MANUALLY RUN 2 PAGES THROUGH THE
FEEDER"
60 SYSTEM"FORMS L=60 P=78 "
65 FOR X = 1 TO 3
70 LPRINTTAB(29);STRING$(80,"*")
80 LPRINTTAB(35);"THIS IS THE TOP OF THE PAGE & SHOULD LINE UP FROM PAGE
TO PAGE"
90 LPRINTTAB(29);STRING$(80,"*")
100SYSTEM"T"
110NEXT X
```

The sheet feeder can also be tested by SCRIPSIT 2.0. It has a sheet feeder driver built in to it. The items that need to be changed are, Column position for left side of paper 32, How many copies 3, Parallel, Serial, or User-driven printer; DWII Form feeder (P,S,U,F)? F. Use the document Memo to users, this is a one page document and works best for a test. The sheet feeder should have the form length switch set to 15. Press reset on the left rear and then run two sheets of paper through the feeder by hand with the third sheet stoping at the card holder. You should then be able to print three Matching copies of the memo.

DATE: May 16, 1983

REVISION DATE: September 24, 1985

BULLETIN NO: I/O:31

PRODUCT: 26-1158 DWII, 26-1158B DWII, 26-1270 DWP-510

SUBASSEMBLY: AX-8627/28 Space and Select Sensor Boards

PURPOSE: Select and Space Sensor Board alignment procedure and to explain the differences in the new boards.

DISCUSSION: The Select and Space Sensor Boards in the Daisy Wheel II, Daisy wheel IIB, and DWP-510 are interchangeable between printers. The physical size and alignments of each board are identical. The only differences between each board is the location and type of components used in each circuit. All of the differences will be described further in this bulletin. Space and Select boards utilize similar circuits to accomplish their tasks. The procedure outlined in this Technical Bulletin can be applied to both sections, however; **be careful because the designators for the trimpots are different on each board.** The purpose of the first four adjustments is to center the output of the A and B channel op-amps above and below logical ground and to insure that the outputs of both the A and B signals have an amplitude of 15 volts peak to peak. The purpose of the PT adjustment is to set the servo speed.

PROCEDURE: **Sensor Board Adjustment Procedure**

The Select board should be aligned first. The adjustments should be made in the order listed in the Note: Tables A & B using the appropiate pin on CN11 and the proper trimpot.

1) Remove the platen. Remove the case of the printer and set to the left side. Disconnect CN28 (CN1 on old board). Remove the metal shield over the circuit cards. Reconnect the CN28 (CN1 on old board). The printer should now be operational.

2) The printer must be printing for the alignment procedure. To prevent unnecessary ribbon usage, remove the ribbon cartridge from the unit. Set the "HAM" switch located on the top of the PCB to OFF.

3) The easiest method to operate the printer for most of the alignments is the self test mode. If you bump a wire and send the printer into "CHECK", just turn the printer off and back on and it will continue. The Self-Test switch is located on the upper right, rear panel of the Daisy Wheel II's and the DWP-510 when facing the front of the printer. If you are using the BASIC program for

the "PT" adjustments it could error the program.

4) **Set the control panel to 10 PITCH (this is important) and OFF-LINE.** Raise the Safety Interlock Switch and move the self-test switch to ON.

**** CAUTION ****
**** Be extremely careful to stay away from the carriage. ****

5) CN11 is the connector test point for all of the alignment procedures. A chart is included to show you which pin of CN11 you should use for each alignment and which trimpot to adjust. Pin 7 of CN11 is logical ground, however due to the difficulty of attaching an aligator clip here, ground your probe to the left of CN11 at the pin marked "LG". NOTE: CN11 is numbered 1 to 10 from the right to the left when looking from the FRONT of the printer.

6) Set your scope to Channel A, coupling = ground, set vertical deflection to 5v/div, Auto triggering, and 1ms/cm time base. You should now have a horizontal line displayed on the screen. Adjust the vertical positioning so that the display is EXACTLY on the centerline. This will need to be rechecked from alignment step to step. Now reset the scope coupling to DC COUPLING. Proceed to Select Sensor Board Alignment Note: Table (A).

7) Adjust the A-Gain control (VR4) for 15 volts peak to peak amplitude of the signal.

8) Now refer to the enclosed charts and adjust the A-Offset on the SELECT sensor board. The scope probe should be attached to CN11 pin 2. Start the printer into the self-test mode and adjust control VR2 (on the Select sensor board) so that the signal displayed is exactly centered above and below the centerline on the scope. Do not be concerned with what is in the waveform, only with the peaks.

Note: Table (A)
Select Sensor Board

Located on the top right of the power board as viewed from the front.

Adjustment	Control	CN11 Pin#	Comments
A-Gain	VR4	2	Adjust for 15 volts peak to peak waveform.
A-Offset	VR2	2	Center waveform on ground reference. Set 7.5 volts above and below ground.
B-Gain	VR3	1	Adjust for 15 volts peak to peak waveform.
B-Offset	VR1	1	Center waveform on ground reference. Set 7.5 volts above and below ground.
PT	VR5	3	24 ms high while printing 180 degree characters. Use this Basic Program: 10 LPRINTCHR$(80);CHR$(61);:GOTO 10

Note: Table (B)
Space Sensor Board

Located on the bottom right of the power board as viewed from the front.

Adjustment	Control	CN11 Pin #	Comments
A-Gain	VR1	5	Adjust for 15 volts peak to peak waveform.
A-Offset	VR2	5	Center waveform on ground reference. Set 7.5 volts above and below ground.
B-Gain	VR3	4	Adjust for 15 volts peak to peak waveform.
B-Offset	VR4	4	Center waveform on ground reference. Set 7.5 volts above and below ground.
PT	VR5	6	17.3ms high while printing 180 degree characters. Use this Basic Program: 10 LPRINTCHR$(80);CHR$(61);:GOTO 10

9) Because of some interaction between the two above steps, it may be necessary to repeat steps 7 and 8 until you have 15 volts peak to peak exactly centered.

10) Now you are ready to adjust Channel B. Move your scope probe to the Select B position on CN11 (pin 1 ==> refer to the chart) and adjust for Offset and Gain as in steps 6, 7, and 8 above. The waveform may appear a little different, however do not concern yourself with what is IN the waveform only its centering above and below ground and its amplitude.

11) The final adjustment on both boards will be the PT. For the Select board the high time of the waveform (see chart) should be 24 ms while printing 2 characters 180 degrees apart on the wheel. The high time for the Space board will be 17.3 ms while printing. The BASIC program must be used for both of the PT alignments!! The front panel MUST be set to 10 PITCH.

12) BASIC PROGRAM: 10 LPRINT CHR$(80);CHR$(61);:GOTO 10

13) Proceed to Space Sensor Board and follow Notes: Table B for adjustments.

Both boards are adjusted following the same procedures as outlined above. In some cases you may find a select or space sensor board that is so far out of adjustment that the printer will not operate long enough to perform the alignment. In this case it is possible to spin the daisy wheel by hand or move the carriage assembly back and forth and watch the scope to make a partial adjustment or short test points 1 and 2 to disable the error detection. Shorting test point #1 and #2 will disable the error protect software keeping the Daisy Wheel II's and DWP-510 from looking for time errors or hunt errors (see Technical Bulletin I/O:28 for more details). This should enable you to get the alignment close enough to allow the printer to operate normally. Then go back and redo ALL of the adjustments as outlined in the Technical Bulletin.

Explaining Differences of Space and Select Sensor Boards

The Space board and Select board have been redesigned and they are the same boards for the Daisy Wheel II, Daisy Wheel IIB, and DWP-510. The alignment for these boards are identical to the above procedure. They are the same exact size, they work indentically, and they have the same adjustment pots in the same location. The only fisical differences are the cosmetics of the boards due to electronic redesign changes. All the changes are listed below:

Select Sensor Board

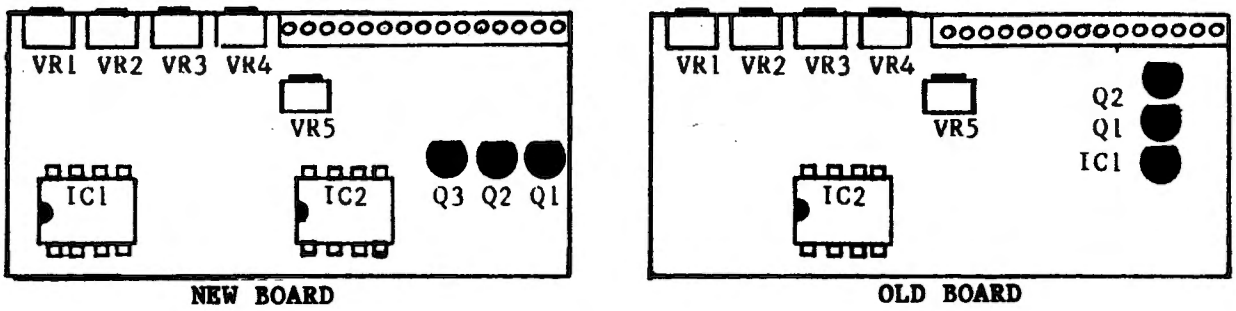

The new Select Sensor board has two IC's and three transistors.
The old board has two IC's and two transistors.
One of the IC's is a transistor on the old board.

Space Sensor Board

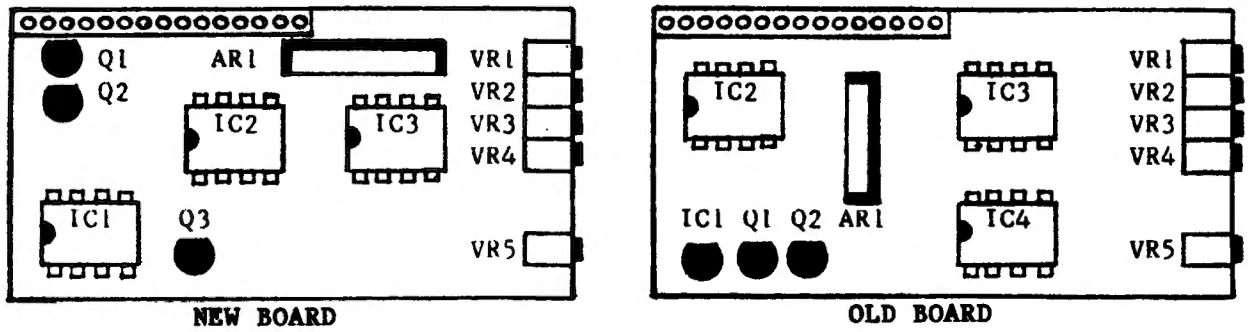

The new board has three IC's and three transistors.
The old board has for IC's and two transistors.

DATE: OCTOBER 12, 1981

REVISION DATE: MAY 24, 1983

BULLETIN NO.: I/O:32

PRODUCT: 26-1158 Daisy Wheel II Printer

SUBASSEMBLY: AXX-0329 Main PCB (Early)

PURPOSE: To describe new ROM for Daisy Wheel II main PCB (Early version).

DISCUSSION: An obscure ROM bug exists in older Daisy Wheel II printers dealing with the underline mode. When in the underline mode the printer will underline all words automatically and not underline the spaces between words. The problem is that the printer will count the number of spaces between two words and then underline the first character of the second word that many times, sometimes cutting holes in the paper.

The following example will illustrate this:

This is a test. That was a test.

There are 10 spaces between "test." and "That". The ROM bug will underline the "T" in "That" 11 times. It will underline once for each space plus once for the character itself.

Currently there is no Radio Shack Software that utilizes the underline mode (Scripsit underlines through software), however the ROM may need to be changed because some customers may wish to use this underline mode.

Several other control codes have been implemented in the new rom. They are as follows:

ESC(24) Enter Daisy Wheel II into EXTERNAL PROGRAM MODE.

ESC(25) Exits EXTERNAL PROGRAM MODE.

ESC(21) Disable auto line feed.

ESC(22) Enable auto line feed.

PROCEDURE: Remove IC19 on the main PCB and install the new ROM (AMX-4805 26-1158) in its place.

DATE: August 27, 1980

REVISION DATE: May 24,1983

BULLETIN NO.: I/O:33

PRODUCT: 26-1171 Telephone Interface II

SUBASSEMBLY: AXX-0323/0323A Main PCB

PURPOSE: To identify different boards in Telephone Interface II.

DISCUSSION/PROCEDURE: There are two different boards used in the Telephone Interface II. These boards are:

P/N	Identifing feature	Microphone used
AXX-0323	J1 is a two pin connector	AM-2304 Two wire ceramic microphone
AXX-0323A	J5 is a three pin connector	AM-2316 Three wire condenser microphone

DATE: May 4, 1981

REVISION DATE: May 24, 1983

BULLETIN NO.: I/O:34

PRODUCT: 26-1172 Modem I

SUBASSEMBLY: AX-8758 PCB

PURPOSE: To correct problem of the carrier detect light staying on in absence of carrier.

DISCUSSION: In order to eliminate this problem it is necessary to increase the level of the carrier needed to activate the carrier detect LED. This will increases the level of detection to the point where noise will not cause the carrier detect LED to light.

PROCEDURE:

Change R50 from 1.1k ohms to 1.8k ohms (N-0210EEC 26-9999R).
Change R59 from 820 ohms to 1.5k ohms (N-0206EEC 26-9999R).

DATE: June 6, 1982

REVISION DATE: May 24, 1983

BULLETIN NO.: I/O:35

PRODUCT: 26-1173 Modem II

SUBASSEMBLY: AX-9195 Logic Board

PURPOSE: Modification for multi-line use and number of rings before answering.

DISCUSSION/PROCEDURE: To modify a Modem II for multi-line use the jumper must be removed from 10-11 and installed onto 9-10. Once this has been done the modem should not be used on a single line system because it may damage the phone system.

To change the number of rings before the modem answers the phone the jumper that is installed on 3-4 should be changed to a different position. 1-2 will answer the quickest and 7-8 will wait the longest.

DATE: September 16, 1982

REVISION DATE: May 24, 1983

BULLETIN NO.: I/O:36

PRODUCT: 26-1173 Modem II

SUBASSEMBLY: AX-9195 Logic Board

PURPOSE: To correct problem of: Modem II does not recognize CD and hangs up even though carrier is present.

DISCUSSION/PROCEDURE: Check the value of R-19. There are three values that you may find for this resistor. 180K or 136K are values that will work properly and should be left alone. However, the early Modem IIs were shipped with a 220K resistor (as noted in the schematic). Check any Modem II arriving in your shop for this 220K resistor and replace it with a 180K. Also make the necessary change in your schematic to reflect this modification.

DATE: July 7, 1983

REVISION DATE: July 7, 1983

BULLETIN NO.: I/O:37

PRODUCT: 26-1210 Network I

SUBASSEMBLY: N/A

PURPOSE: Schematics for the Network I.

DISCUSSION/PROCEDURE:

The following pages contain the schematics for the Network I.

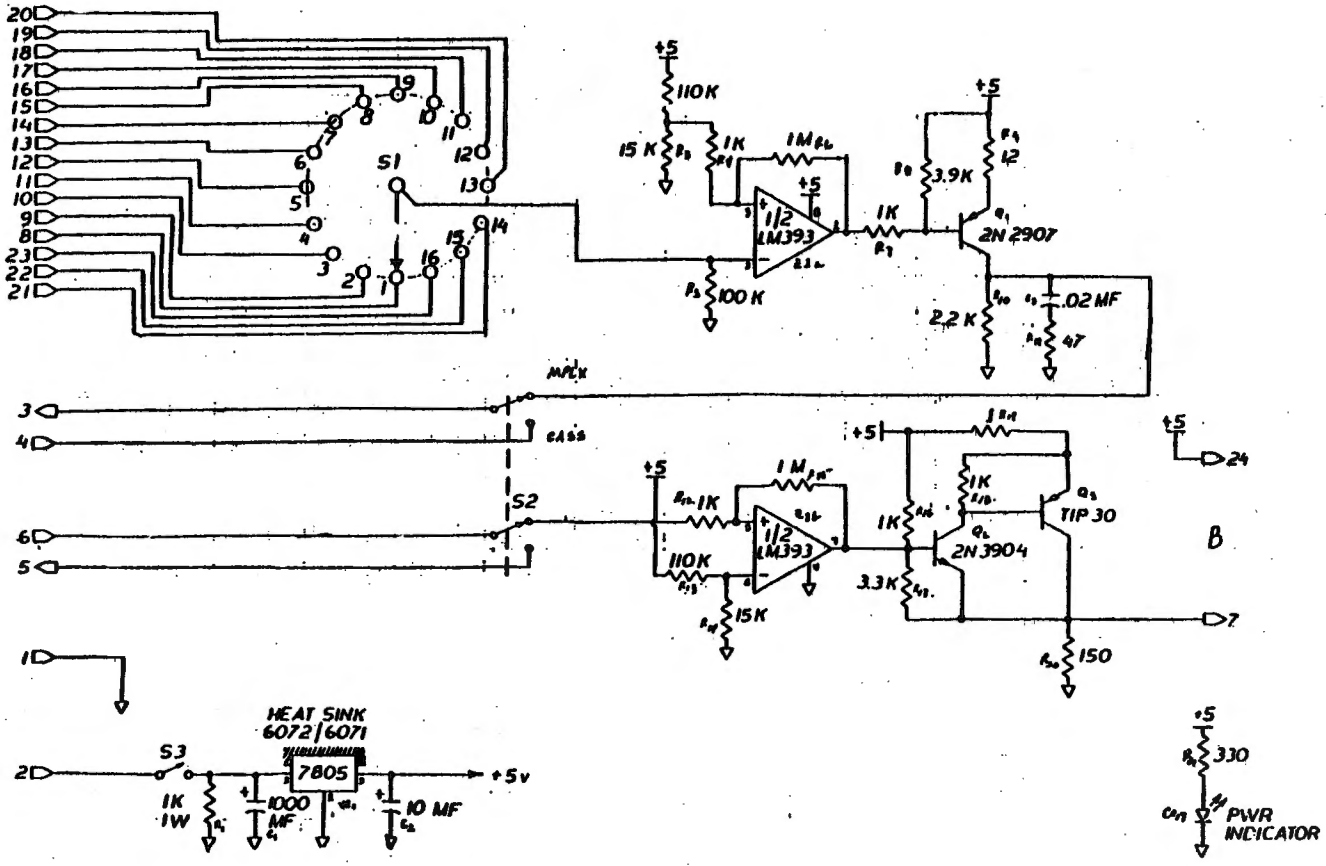

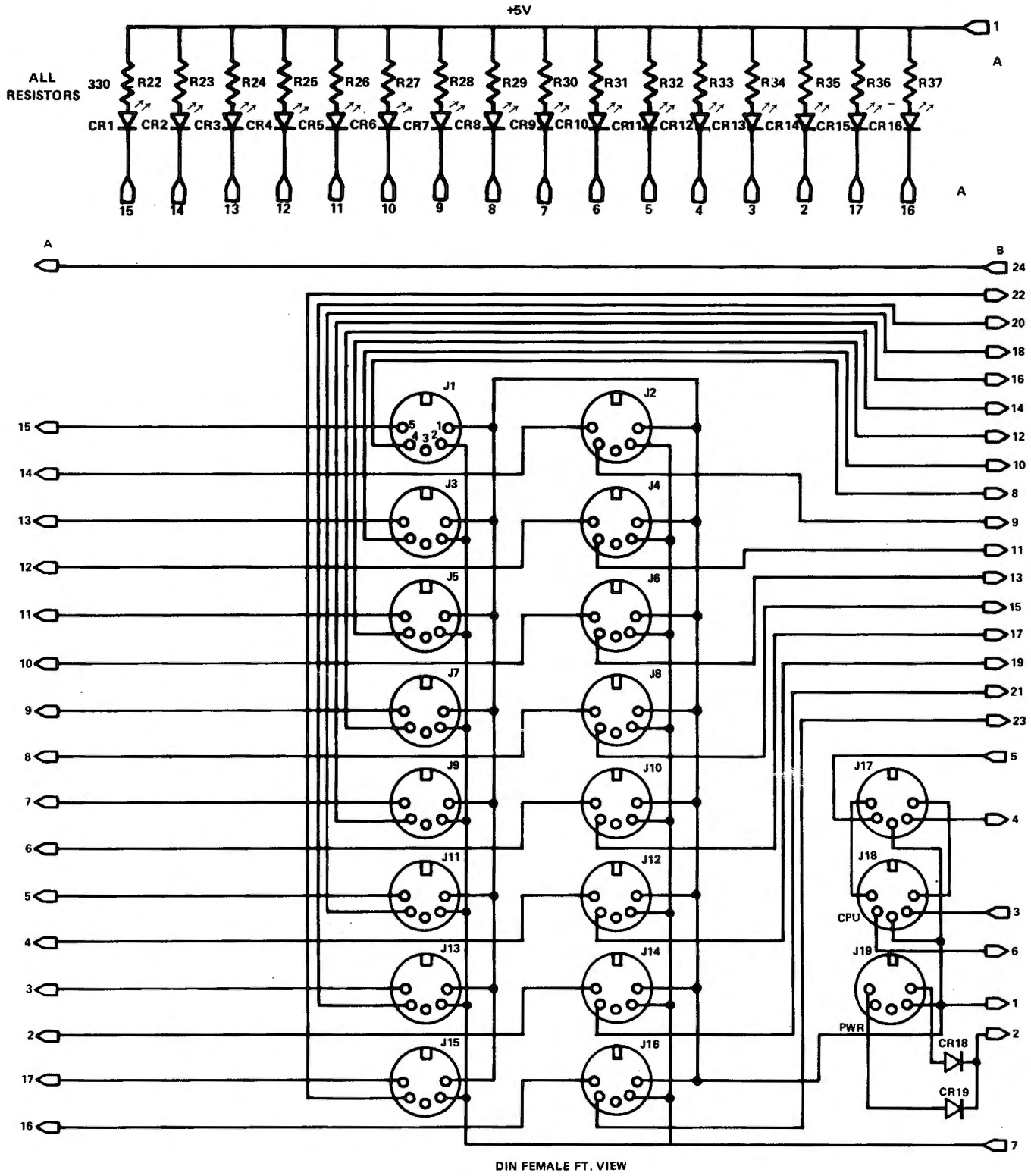
+5V
ALL RESISTORS
330
R22 R23 R24 R25 R26 R27 R28 R29 R30 R31 R32 R33 R34 R35 R36 R37
CR1 CR2 CR3 CR4 CR5 CR6 CR7 CR8 CR9 CR10 CR11 CR12 CR13 CR14 CR15 CR16
J1 J2 J3 J4 J5 J6 J7 J8 J9 J10 J11 J12 J13 J14 J15 J16
J17 J18 J19
CPU
PWR
CR18
CR19
DIN FEMALE FT. VIEW

DATE: September 22, 1982

REVISION DATE: September 9, 1983

BULLETIN NO.: I/O:38

PRODUCT: 26-1211 Network II

SUBASSEMBLY: N/A

PURPOSE: To correct inoperative CSAVE function.

DISCUSSION: The heat sink on the 5 volt regulator may short to the mode switch. Since the heat sink is painted, it may take a while for vibrations to wear away the paint. This problem will disappear when the board is removed from the case. The problem will not reappear until the case is reinstalled.

PROCEDURE: Bend the heat sink, just below the switch, back or down to prevent contact between it and the mode switch.

DATE: July 13, 1979

REVISION DATE: March 2, 1983

BULLETIN NO.: I/O:39

PRODUCT: TRS-80 Recorders

SUBASSEMBLY: CTR-40, CTR-41, CTR-80, CCR-81

PURPOSE: Head azimuth alignment procedures.

DISCUSSION:

Below is the alignment procedures for all of the recorders sold for the TRS-80 computers. The only alignment difference between recorders is some do not have the small hole in the case to reach the record/play head. If the recorder does not have this hole you will have to take the mechanism out of the case for the alignment.

PROCEDURE:

I. Equipment Required:

A. Oscilloscope
B. Teac test tape MTT-113 (ACT-0093)
C. Non-metallic flat point screw driver
D. 220 ohm 1/2 watt resistor (Nat'l Parts# AN-0149EFC 26-9999R)
E. Mini-jack plug

II. Set-Up:

A. Oscilloscope
1. Time Base = .5 millisec./cm.
2. Volts/Div = 20 millivolts/cm. (x10 probe = .2v)

B. Recorder
1. Insert power plug
2. Insert mini-jack plug with 220 ohm resistor across shield and center wire. (See figure 1)
3. Attach oscilloscope probe to ends of resistor.
4. Insert MTT-113 tape and fast forward to the approximate center of the tape.
5. Depress "Play"

III. Calibration:

A. Adjust volume on recorder to display 100 millivolts peak to peak on the label side of the test tape.
B. Remove test tape, turn it over, and insert it again with reverse side up. DO NOT change volume setting.
C. Check millivolts output. Side two should equal side one (100 mV) +- 10 millivolts.
D. If recorder is out of tolerance insert small screwdriver through the hole on top of the recorder (may have to open recorder) and adjust to obtain equal amplitude readings from both sides of the tape. (See figure 1)
E. After adjustment, fix the Azimuth Adjusting Screw with glyptal or "screw lock".

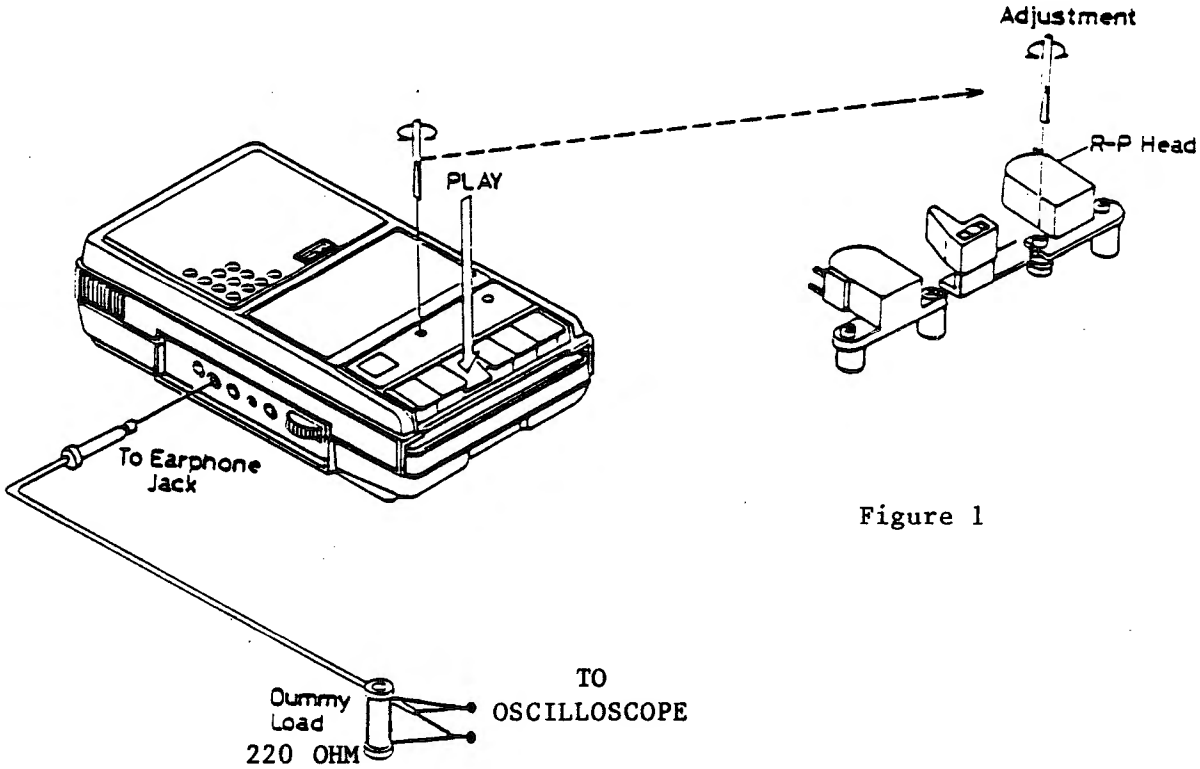

Figure 1

DATE: May 1, 1980

REVISION DATE: March 3, 1983

BULLETIN NO.: I/O:40

PRODUCT: 26-1205 CTR-80 Recorder

SUBASSEMBLY: Units with date codes 1A0, 2A0, and 3A0

PURPOSE: To correct overly critical volume setting when loading programs.

DISCUSSION:

On units with date codes 1A0, 2A0, and 3A0, audio taper potentiometers may have been installed in place of linear taper pots, resulting in a lower and/or smaller volume range that computer tapes will properly load in.

NOTE: The date code and serial number of the unit can be found in the battery compartment.

PROCEDURE:

For the following procedure refer to figure 1.

1. Cut circuit board trace that runs from volume control centertap, to switch S1, 7th pin form the left.

2. Install a 39k, 1/4 watt resistor (Nat'l Parts# AN-0330EEC 26-9999R) from the volume control centertap circuit board land to the 7th pin of switch S1. Be certain that the leads of the resistor do not short to any other lands.

AMPLIFIER P.C.B. PARTS LOCATION — BOTTOM VIEW

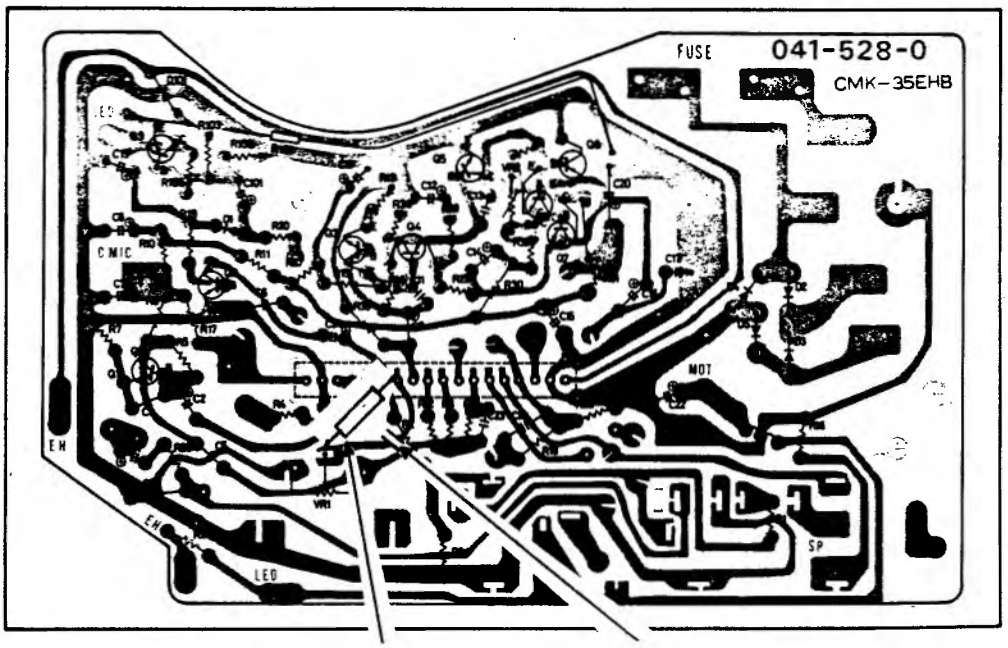

39K OHM CUT TRACE

Figure 1

DATE: May 14, 1982

REVISION DATE: August 26, 1983

BULLETIN NO.: I/O:41

PRODUCT: 26-4104 Model II Hires Graphics Board

SUBASSEMBLY: N/A

PURPOSE: To correct small hash marks in the first eight inches of the left side of the video display.

DISCUSSION/PROCEDURE: This problem will occur when updating the video memory on revision A boards. To modify install the following cuts and jumpers:

Cuts:	U26 pin 6 (pin 26 on the edge card connector)		
(See figure 1)	U28 pin 5 (cut at the first feed through)		
Jumpers	U38 pin 39	to	U32 pin 4
	U38 pin 40	to	U32 pin 5
	U32 pin 6	to	U26 pin 6
	U26 pin 14	to	U28 pin 5

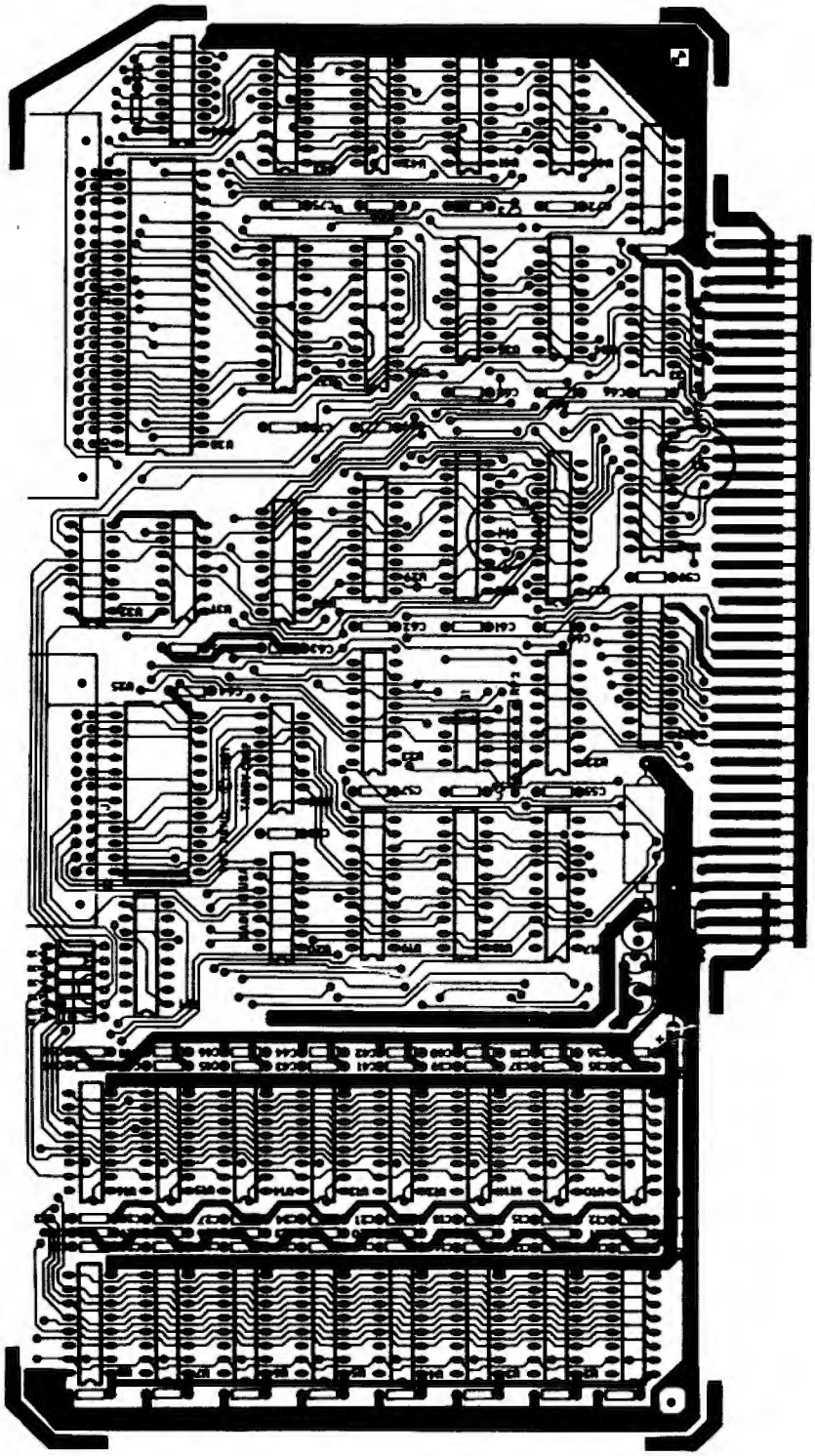

Figure 1

DATE: July 11, 1983

REVISION DATE: July 11, 1983

BULLETIN NO.: I/O:42

PRODUCT: Model II, Model III, Model 4, DT-1

SUBASSEMBLY: CRT

PURPOSE: Replacement procedure for Black and White CRTs

PROCEDURE/DISCUSSION: Customers who request green CRTs in Model IIs, IIIs, 4s, or DT-1s can have them installed by using one of the following parts:

Motorola AXX-8014 OR Zenith AXX-8015. Order under catalog number 26-6002.

The existing yokes and monitor boards for these products will function properly with either CRT. Use caution when handling the CRT, the neck can snap off very easily. After replacement be sure to properly align the display.

NOTES:

1) If the unit is a Model II and it has a Motorola monitor board, the board MUST be modified as outlined in Tech Bulletin II:5. If the board is not modified it can damage the VDG board and possibly the power supply.

2) Model IIs and Model IIIs with RCA monitor boards may exhibit retrace lines that cannot be eliminated by adjusting the contrast or brightness pots. These boards need to be modified according to Tech Bulletins II:14 or III:1.

DATE: June 23, 1983

REVISION DATE: June 23, 1983

BULLETIN NO: I/O:43

PRODUCT: 26-6050 DT-1

SUBASSEMBLY: AX-9258 Main Logic Board

PURPOSE: To discuss problems with DT-1 sending all Capital letters.

DISCUSSION: Some DT-1 terminals have been demonstrating problems with sending all capitals to the HOST. This is particularly a problem when using the XENIX Operating System.

XENIX will send back an error code the first time you try to log in using capitals. But, it you try again the system will automatically re-map the incoming data to lower case and accept your log in. This then becomes a problem because some commands in XENIX require both upper and lower case letters.

PROCEDURE: Several items have been found to cause this problem. Check the keyboard cable and keyboard buffer U-23. Also, do not overlook the CAPS LOCK switch itself as a potential problem.

DATE: April 22, 1983

REVISION DATE: April 22, 1983

BULLETIN NO: IO:44

PRODUCT: 26-125Ø DWP 41Ø

SUBASSEMBLY: AX-9276 Control PCB

PURPOSE: To correct test points given in service manual for SEL Drive and SP Drive adjustment procedures.

DISCUSSION/PROCEDURE: Page 94 of the service manual outlines the procedure for the SEL Drive and SP Drive speed adjustments. The test points given for these two adjustments are marked incorrectly in the manual under Section 5-2(1) and should be changed. The schematics are labeled correctly and should not be changed.

Presently the manual reads:

1- GND	(synchroscope)
2- TEST	CHA....SEL Drive (Pin 4 of CN Ø/11)
3- +5V	CHB....SP Drive (Pin 5 of CN Ø/11)
4- SEL Drive	GND....GND (Pin 1 of CN Ø/11)
5- SP Drive	

Change Service Manual test points to the following:

1- GND	(synchroscope)
2- TEST	CHA....SEL Drive (Pin 5 of CN Ø/11)
3- +5V	CHB....SP Drive (Pin 4 of CN Ø/11)
5 -SEL Drive	GND....GND (Pin 1 of CN Ø/11)
4 -SP Drive	

DATE: February 15,1983

REVISION DATE: February 15,1983

BULLETIN NO.: I/O:45

PRODUCT: 26-1156A Line Printer III

SUBASSEMBLY: AXX-0322 Controller PCB

PURPOSE: To correct problem of printer only printing the letter H when self test is initiated after replacing the controller board.

DISCUSSION: On the 26-1156A style board two connector positions were added that were not on the old 26-1156 style board: J202/J203. J202 is used for choosing between Tandy Code and ASCII Code characters from Hex 5B to Hex 5F. J203 is not used and should **NOT** be jumpered. Jumpering J203 will cause the printer to print only the letter H when self test is initiated.

PROCEDURE: Before installing new controller board check connector position J203 for jumper (Refer to Figure 1). If jumper is installed remove it.

REVISED CONTROLLER PRINTED CIRCUIT BOARD TOP VIEW (Page 84)

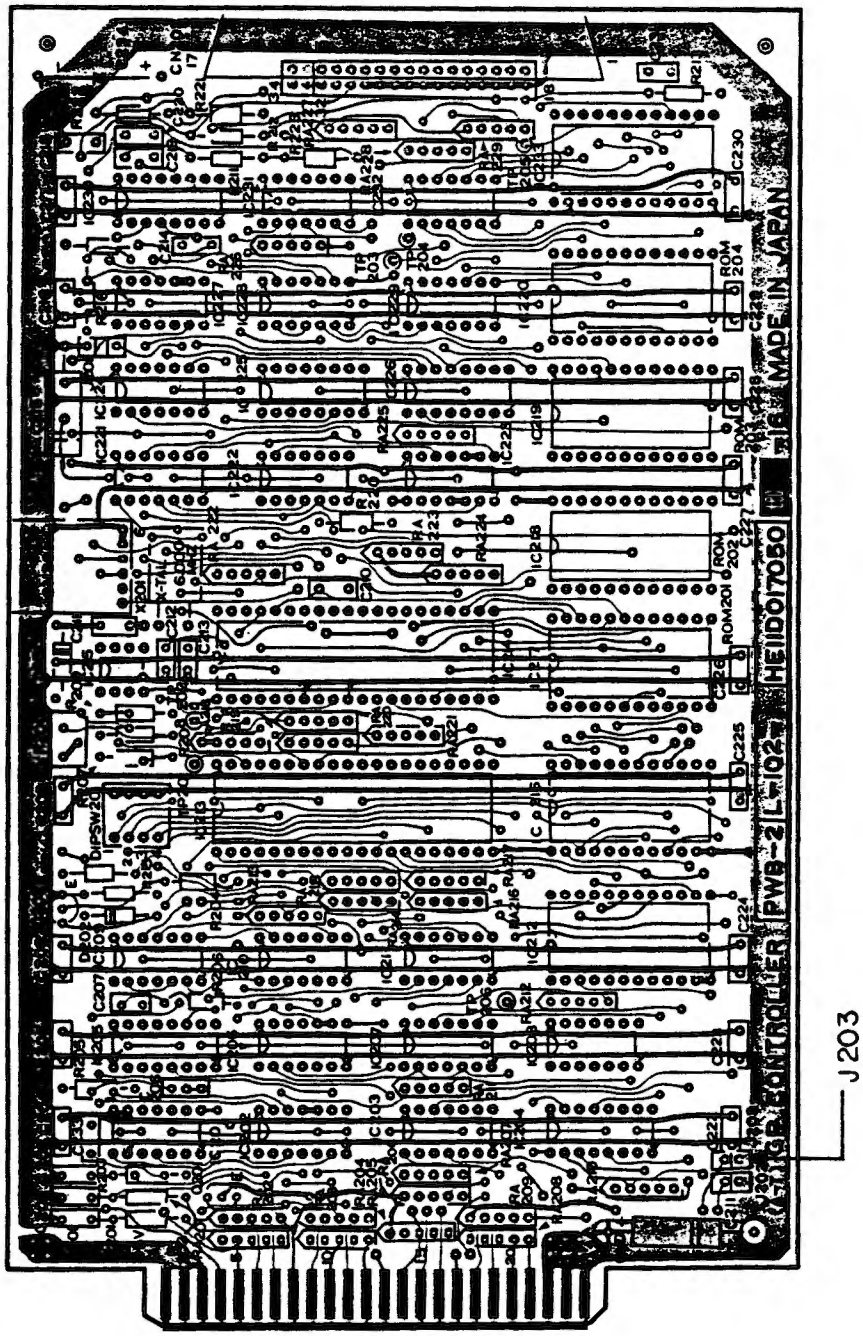

Figure 1.

DATE: July 15, 1983

REVISION DATE: July 15, 1983

BULLETIN NO: I/O:46

PRODUCT: 26-1255 DMP 12Ø (Below Serial Number 3EØ557Ø)

SUBASSEMBLY: AX-9345 Master PCB

PURPOSE: To correct garbage being printed by the DMP 12Ø when used with Color Computer Scripsit.

DISCUSSION: Early DMP 12Øs will print garbage when printing a Color Computer Scripsit document. In nearly every case, the block character printed will represent the decimal value of the correct character plus decimal 128 (eighth bit set). This is due to timing incompatibility on the data and busy lines between the Color Computer and the DMP 12Ø when using Color Scripsit. Units with serial numbers BELOW 3ØEØ557Ø could exhibit this problem and will need to be modified. A new ROM (EP-159) has been installed into DMP 12Øs from serial number 3EØ557Ø correcting this problem with Color Computer Scripsit. DO NOT modify DMP 12Øs with this new ROM as they will not work properly with the modification.

PROCEDURE: To correct this problem perform the following modification (Refer to Figure 1 for schematic revision and Figure 2 for component layout):

1) Cut trace right at IC11 (CPU) pin 18 (Refer to Figure 3).
2) Change R3Ø from 1ØK ohm to 2.2K ohm 5% 1/4 watt.
3) A. Add a 22Ø ohm 5% 1/4 watt resistor at pin 11 of IC7.
   B. Add a jumper from the other end of this 22Ø ohm resistor to R3Ø. This jumper should be added to the end of R3Ø that goes to IC11 pin 11 not the +5V side.
   C. Use a piece of vinyl tubing (shrink) around the junction of the 22Ø ohm resistor and the added jumper connecting the 22Ø ohm resistor and R3Ø to prevent shorting.
4) Add a 1ØK ohm 5% 1/4 watt resistor between pin 1Ø of IC7 and J33.
5) Add a jumper from pin 1Ø of IC7 to pin 18 of IC11.
6) Add a .33ufd capacitor (35V 1Ø% Tantalum) with the positive lead (marked by a + or dot) going to IC7 pin 11 and the negative lead going to IC7 pin 7.
7) Change C25 from a .1ufd capacitor to a .68ufd capacitor (35V 1Ø% Tantalum).

The components needed for this modification can be ordered from National Parts using the following Part Numbers and Catalog Numbers:

Part Number	Catalog Number	Description
N-Ø216EEC	26-9999R	Resistor 2.2K ohm 5% 1/4 watt
N-Ø149EEC	26-9999R	Resistor 22Ø ohm 5% 1/4 watt
N-Ø281EEC	26-9999R	Resistor 1ØK ohm 5% 1/4 watt
CC-334KGTP	26-9999C	Capacitor .33ufd 35V 1Ø% Tantalum
CC-684KGTP	26-9999C	Capacitor .68ufd 35V 1Ø% Tantalum

A quantity of one (1) of each component will be needed for each individual DMP 12Ø that will be modified.

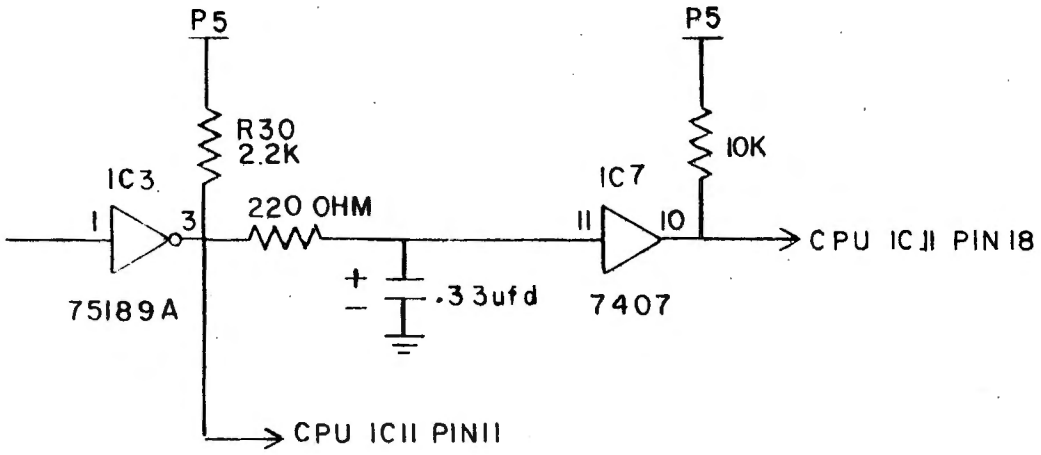

Schematic Revision
Figure 1

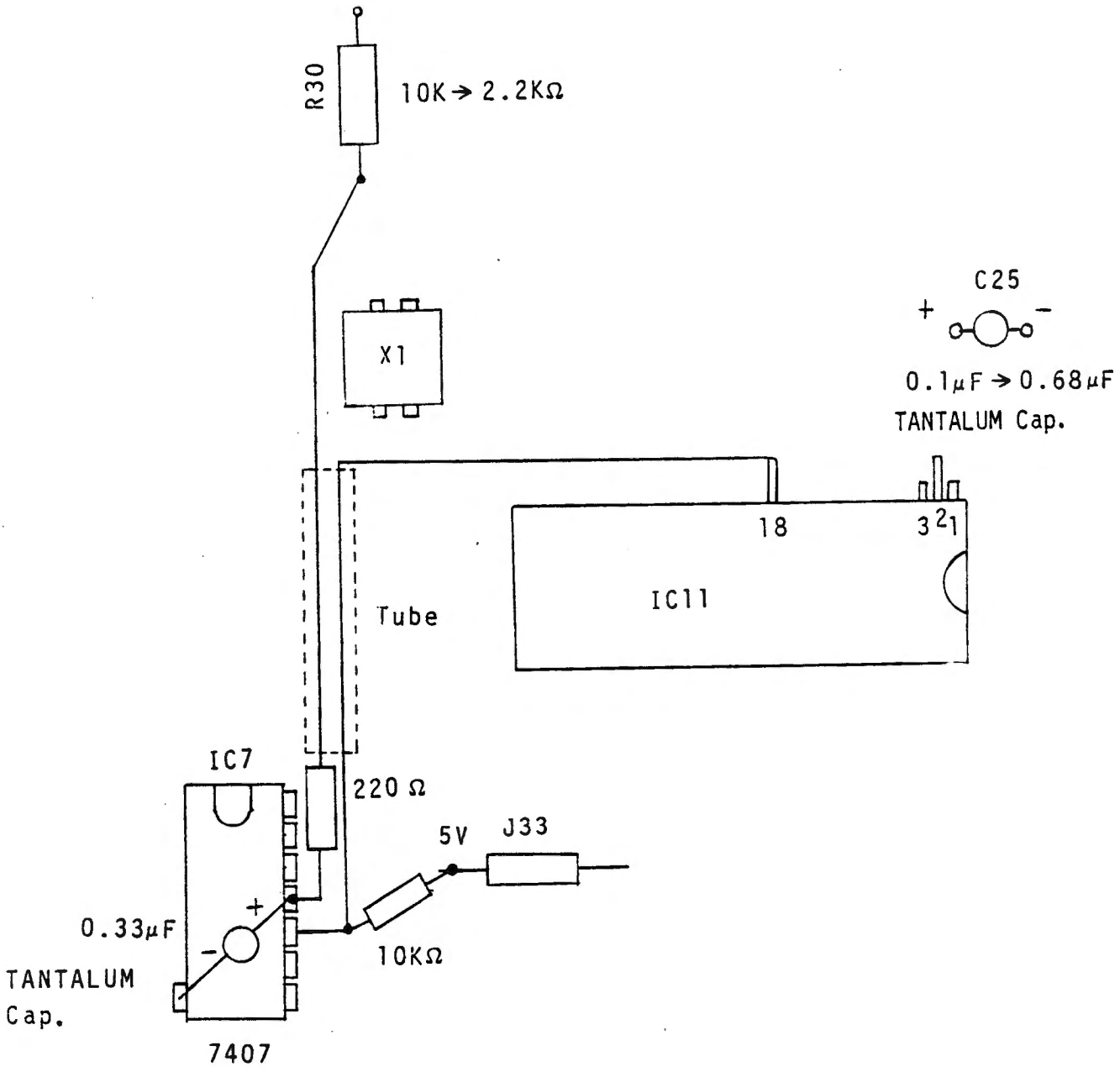
R30
10K → 2.2KΩ
X1
C25
+
−
0.1μF → 0.68μF
TANTALUM Cap.
18
3 2 1
IC11
Tube
IC7
220 Ω
5V
J33
0.33μF
+
−
10KΩ
TANTALUM
Cap.
7407

Figure 2

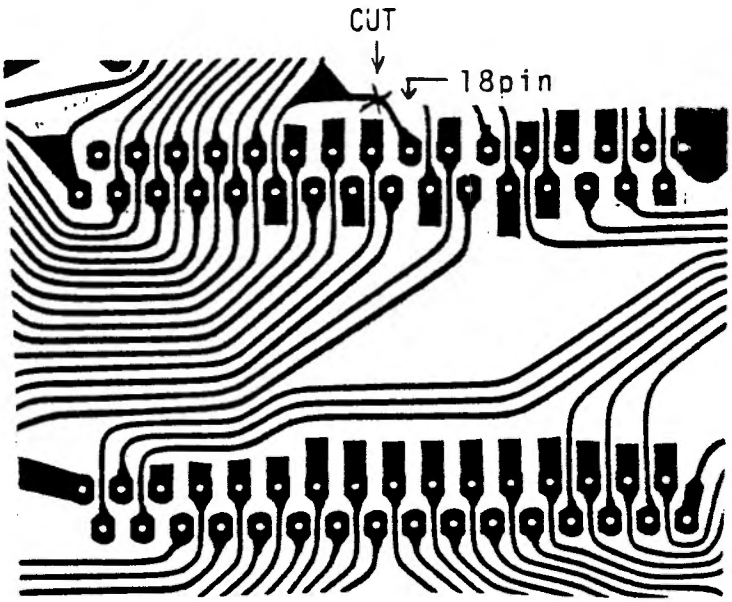

Backside of CPU

Figure 3

DATE: May 2, 1983

REVISION DATE: June 30, 1983

BULLETIN NO.: I/O:47

PRODUCT: 76-1001/1001A PT-210

SUBASSEMBLY: AX-9266 Main PCB

PURPOSE: To correct problem of printing ± when rubout character is received (7F Hex).

DISCUSSION: Most Host systems use hexadecimal 7F for the rubout character. When this code is received the PT-210 prints the ± character. This problem will occur in PT-210s with date codes before 3A3.

PROCEDURE: Remove IC14 and discard it. Install new ROM (MX-5574) in position IC14 and check unit thoroughly.

DATE: October 21, 1982

REVISION DATE: October 21, 1982

BULLETIN NO.: I/O:48

PRODUCT: 26-1173 Modem II

SUBASSEMBLY: AX-9195 Logic Board

PURPOSE: On some phone systems, and at some remote locations, the Modem II may not answer the phone when it rings.

DISCUSSION: To correct the problem of the Modem II not answering the phone when it rings, we change the bias on transistor Q2, lowering the ring detect level for small loop currents.

PROCEDURE: Change R21 from a 4.7K ohm to a 10K ohm resistor. Remove CR3, a 1N5221B zener, and replace it with a 1N4148 diode. **Note: The 1N4148 polarity is reversed on the silkscreen, so the 1N4148 must be installed backwards.**

DATE: November 22, 1982

REVISION DATE: November 22, 1982

BULLETIN NO.: I/O:49

PRODUCT: DC-1200 Modem

SUBASSEMBLY: Main circuit board

PURPOSE: To explain how to modify the DC-1200 Modem for synchronous use (BiSync) and the functions of the other DIP switches.

PROCEDURE: To modify the modem for synchronous operation

1. Unplug all cables.
2. Unscrew the board retaining screw on the bottom front of the modem case.
3. Hold the case securely and pull the front handle on the front of the modem (it should come apart easily). On the DIP switch labeled SW, put position 2 in the closed position.
4. Reverse the procedure to reassemble the modem.

DISCUSSION: The option switches on SW are as follows:

	Closed	Open
SW-1	Half Duplex	Full Duplex
SW-2	Bit Synchronous	Asynchronous
SW-3	The originate speed is set by Pin 23 on the DB 25 connector	Originate speed is set by the HS switch on the front panel

NOTES:
As the modem comes from the factory, all the DIP switches will be open. When SW-3 is in the open position, the baud rate of the modem for the originate mode only is set by the HS pushbutton on the front panel. When SW-3 is closed, the baud rate is controled by pin 23 on the DB 25 connector.

DATE: November 4,1982

REVISION DATE: November 4,1982

BULLETIN NO.: I/O:50

PRODUCT: 26-4104 MODEL II/16 GRAPHICS BOARD

SUBASSEMBLY: GRAPHICS PCB

PURPOSE: When using the Model II/16 Graphics Board option; random bits may remain "stuck" on or off. This problem will generally appear within a small column on the left side of the display. Failure of graphics board memory under test may also be a symptom.

PROCEDURE: This fix applies to revision "A" and "B" graphics boards only. Because the modification is different for each revision, these modifications will be outlined seperately.

REVISION "A":

1) Change delay line U44 from a 250ns to a 150ns part.
2) Move tap on MUX* output from U44 pin 4 to U44 pin 12.
   a) Cut trace from U44 pin 4 to U31 pin 5.
   b) Add jumper from U44 pin 12 to U31 pin 5.

REVISION "B":

1) Change delay line U44 from a 250ns to a 150ns part.
2) Change devices U40, U41, U42, and U43 from 74LS153 to 74S153.

The part number for the 150ns Digital Delay Unit is AMX-5756 under catalog number 26-4104.

Radio Shack®
A Division of Tandy Corporation

NATIONAL TECHNICAL SUPPORT 0220 817-390-3810
400 ATRIUM—ONE TANDY CENTER, FORT WORTH, TEXAS 76102

DATE: July 18, 1984

TO: All Computer Service Personnel

FROM: Technical Support

SUBJECT: Discard Technical Bulletin I/O:51

Enclosed is the revised Bulletin I/O:66. This revision incorporates bulletin I/O:51. Remove and discard bulletin I/O:51 and insert this memo in its place until a new I/O:51 is received.

DATE: June 1Ø, 1985

REVISION DATE: July 26, 1985

BULLETIN NO.: I/O:51

PRODUCT: 26-1136/37 Network 4

SUBASSEMBLY: N/A

PURPOSE: Installation procedures for Network 4.

DISCUSSION: The Network 4 is a daisy chain Local Area Network which allows up to 63 Model 4 or Model III student stations and 1 or more master stations to be hooked together in a network (only one master station may be used on the network at one time). In order for a machine to function in the network it must have a Network 4 upgrade kit installed. The computer may use either a master or a slave upgrade kit, the only difference between the two being that the master kit includes an extension cable for the I/O port to enable both a hard disk and the network board to be installed. Each machine has a number from Ø to 63 which is setup by means of a dip switch on the back panel. No two computers may have the same number and the master must be number 63. Installation procedures for these kits are given below.

PROCEDURE:

1.) Before starting the upgrade, the Model 3 or Model 4 memory test must be run in order to insure that the ROM "A" checksum is the correct version to work with the network "C" ROM. These checksums should be B5Ø4/DA42 for a Model 4 or 8F46 for a Model 3. If these checksums do not match ROM "A" must be replaced with the latest version Model 4 ROM "A".

2.) Remove the case top and the RFI shield covering the main CPU. Remove the screw clip from the old RFI shield and put it on the new one.

3.) Remove the old "C" ROM (U7Ø) from the CPU and install the ROM provided with the upgrade kit. If the unit is a Gate Array Model 4, the "D" ROM (U4) must be replaced with a different ROM, part# MX-3Ø84 under catalog# 26-1136.

4.) Remove the connector bracket that holds the power cord and cassette connector by removing the four base screws and the ground screw. The power cord must be unsoldered from the power switch at this time.

5.) The cassette connector and power cord must now be removed from the back plate by squeezing the sides of the connectors with a pair of pliers. The torroid ring must also be removed from the power cord. Note how the torroid ring is wrapped so it may be rewrapped in step 6.

6.) Attach the 50-pin I/O edge card connector to the CPU I/O port leaving the female socket on the inside and the expansion edge card connector (if the kit is a master kit) on the outside. If installing a master kit, install the card adapter provided in the external card edge connector.

7.) Mount the power cable and cassette connector on the new rear panel connector bracket supplied with the kit. Rewrap the torroid coil the same way it was before and resolder the power cable to the power switch. Mount the new back panel onto the computer.

8.) If the unit is a Gate Array Model 4, the screw on the bottom left hand corner of the Network 4 PCB must be removed as it will short to the printer port components on the Main PCB when the new RFI shield is mounted.

9.) Mount the new RFI shield containing the Network 4 PCB. Connect the 50-pin cable to the header on the Network PCB. Connect the 10-pin cable between the dip switch assembly on the back panel and the Network 4 PCB.

10.) If the computer is a regular Model 4 with a 65 watt power supply, pull the 2-pin power supply connector from the harness and plug it into the 2-pin connector on the Network 4 PCB.

If the power supply is a 38 watt power supply, the power connector from the upgrade kit must be used. This cable is plugged into the floppy drive power supply and takes the place of the FDC power cable unless the unit contains only one power supply. If the unit contains only one 38 watt power supply and has a RS-232 board the yellow wire must be removed from the RS-232 plug and installed into the new power cable in the open slot. The new power cable must then be substituted for the old RS-232 harness.

If the unit is a Gate Array Model 4 you must add the new power cable to the D.C. harness on the 65 watt power supply. To do this, cut off the 4-pin connector on the power cable supplied with the kit leaving just the two pin connector with the red and brown wires. Insert the brown lead into one of the "common" slots (the first three slots) of the D.C. harness on the power supply. Then insert the red lead into one of the "V1" (the next three slots) of the power supply connector.

11.) Tie off all of the cables with tie-wrap and replace the case top.

12.) Run Network 4 diagnostics and verify proper operation of the machine.

NOTE:

If testing a Hard Drive formatted with the Network 4 operating system, please note that this operating system does not provide a diagnostic cylinder. Any attempt to use the diagnostic cylinder with our diagnostics will likely destroy customer data. Make sure the customer has made backups.

DATE: December 23, 1982

REVISION DATE: December 23, 1982

BULLETIN NO.: I/O : 52

PRODUCT: 26-6Ø5Ø DT-1 Terminal

SUBASSEMBLY: AX-9258 PCB assembly

PURPOSE: To prevent or cure vertical lines in video

DISCUSSION:

It has been found that switching transients in the main clock oscillator circuit can cause vertical lines to appear in the video. A minor change in parts values can eliminate the vertical lines without affecting important circuit timing.

PROCEDURE:

Change the following parts:

PART NUMBER	ORIGINAL VALUE	CHANGE TO	NATIONAL PARTS #
C5	.ØØ1 µf	47 pf	CF-1866
C12	1Ø pf	47 pf	CF-1866
R1	33Ø ohm	1.2K ohm	N-Ø199EEC
R3	33Ø ohm	1.2K ohm	N-Ø199EEC

Check the parts before you change them, as later productions already have this change implemented.

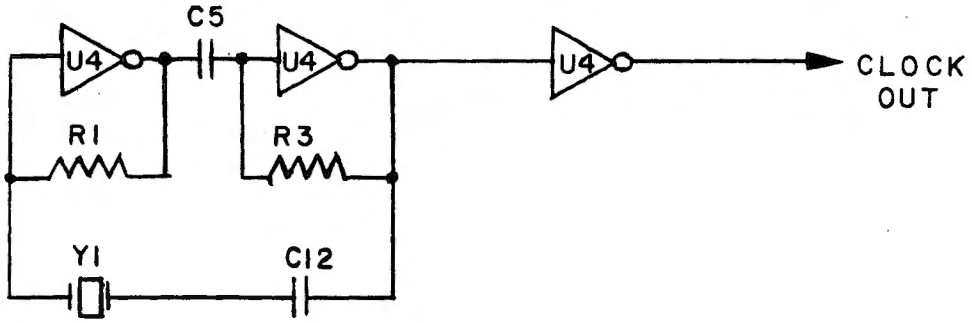

DATE: January 25, 1983

REVISION DATE: February 23, 1983

BULLETIN NO.: I/O : 53

PRODUCT: 26-1212 Network III Controller

SUBASSEMBLY: N/A

PURPOSE: Network III will lock onto one channel even if that channel is not 'occupied'. This may happen consistently or intermittently, on any or all channels.

DISCUSSION:

In most cases such as this, it has been found that the HOST computer is receiving a false CTS (Clear To Send) signal. If a false CTS is received, the HOST locks onto this channel, waiting for a transmission which is never received. Tracing the CTS signal backwards will find that one or more outputs of U1, 2, 11, or 12 are LOW, even with no SLAVE computer attached.

RS232 specifications indicate that RS232 signals must be GREATER than +3 volts or LESS than -3 volts (see Figure 1). The pull down resistor packages RP1, 2, 3, 4, and 5 are to insure that the inputs of U1, 2, 3, 4, 11, 12, 13, and 14 are held at a valid logic level.

Due to slight variations in the above chips, the pull down resistors may not pull the inputs all the way to a valid logic level. In fact, on some units that have failed, the voltage on the inputs has been found to be between -2 and -2.5 volts -- in the undefined area of the logic states (see Figure 1). Under these conditions, a stray noise spike may produce an intermittent false CTS signal, or the IC may interpret the voltage as a HIGH, and produce a continuous false CTS.

PROCEDURE:

First, check to see that the above problem exists by measuring ALL inputs of U1, 2, 3, 4, 11, 12, 13, and 14 with NO SLAVE computer(s) attached. Use a DVM (not an oscilloscope) and be sure that ALL inputs have a voltage between -3 volts and -12 volts.

If the input voltages are WRONG (typically -2.2 to -2.4 volts), replace RP1,2,3,4 and 5 with a 1ØK ohm package (National Parts number ARX-Ø137, order under catalog number 26-1155).

After replacing the resistor packages, measure the input voltage levels on U1, 2, 3, 4, 11, 12, 13, and 14 to be sure that the are between -3 and -12 volts.

After all input voltages are determined to be correct, measure the output voltage of U1, 2, 3, 4, 11, 12, 13, and 14 to make sure that they are all HIGH (+5 volts).

RS232 VOLTAGE LEVEL SPECIFICATIONS

```
+25 VOLTS ----------------MAXIMUM ALLOWABLE VOLTAGE----------------

+12 VOLTS ------------NETWORK III NOMINAL VOLTAGE LEVEL------------

                  +3 TO +25 DEFINED AS LOGIC "ZERO"
                            (see note 1)

 +3 VOLTS ------------------------------------------------------------
          ////////////////////////////////////////////////////////////
          ////////////////////// * UNDEFINED STATE * //////////////////
  Ø VOLTS ------------------------------------------------------------
          ////////////////////// * NOT ALLOWED * //////////////////////
          ////////////////////////////////////////////////////////////
 -3 VOLTS ------------------------------------------------------------

                  -3 TO -25 DEFINED AS LOGIC "ONE"
                            (see note 1)

-12 VOLTS ------------NETWORK III NOMINAL VOLTAGE LEVEL------------

-25 VOLTS ----------------MINIMUM ALLOWABLE VOLTAGE----------------
```

FIGURE 1

NOTE 1: RS232 uses negative logic.

DATE: February 3, 1983

REVISION DATE: February 3, 1983

BULLETIN NO.: I/O:54

PRODUCT: 26-1192 CGP-115

SUBASSEMBLY: AX-92Ø6 PCB
MS26Ø1192 Service Manual

PURPOSE: To describe changes on PCB concerning BUSY* and FAULT lines, and to document changes in service manual.

DISCUSSION:

To make the CGP-115 printers' parallel interface connections fully consistent with Radio Shack specifications, it was necessary to add BUSY* and FAULT signals to the printer status lines. The circuit changes required the addition of two lines going to the parallel port. The serial port remains unaffected.

The following is for your information only. These changes are NOT mandatory, and should not be attempted unless the the lack of these two signals is proven to be a problem.

These two changes are as follows:

1) Add signal BUSY* (BUSY NOT) to Pin 13 of Connector 1 (the parallel interface connector).

Usually, printer software (and some hardware) will check the BUSY line (pin 11) for an active HIGH signal. However, some software or hardware may be looking for a BUSY* active LOW. This signal is supplied at pin 13 for such instances.

2) Add a pull-up resistor (R19) to Pin 32 of Connector 1, and call this pin FAULT.

The CGP-115 does not actually produce a signal which indicates a FAULT condition. However, some printer software and hardware check this signal. The added pullup resistor assures a valid logic HIGH (no faults) for the software and hardware which requires it.

Figure 1 shows these two signals as schematic changes. Please correct your schematic as necessary.

Figure 2 shows the changes to the connector pin layout diagram. Please correct this diagram in your service manual.

Figure 3A and 3B show the changes to the PCB layout. On the TOP view, note the addition of R19, located between C12 and CON1. On the BOTTOM view, note the addition of two traces. One connects to CON1 pin 13, the other connects to CON1 pin 32.

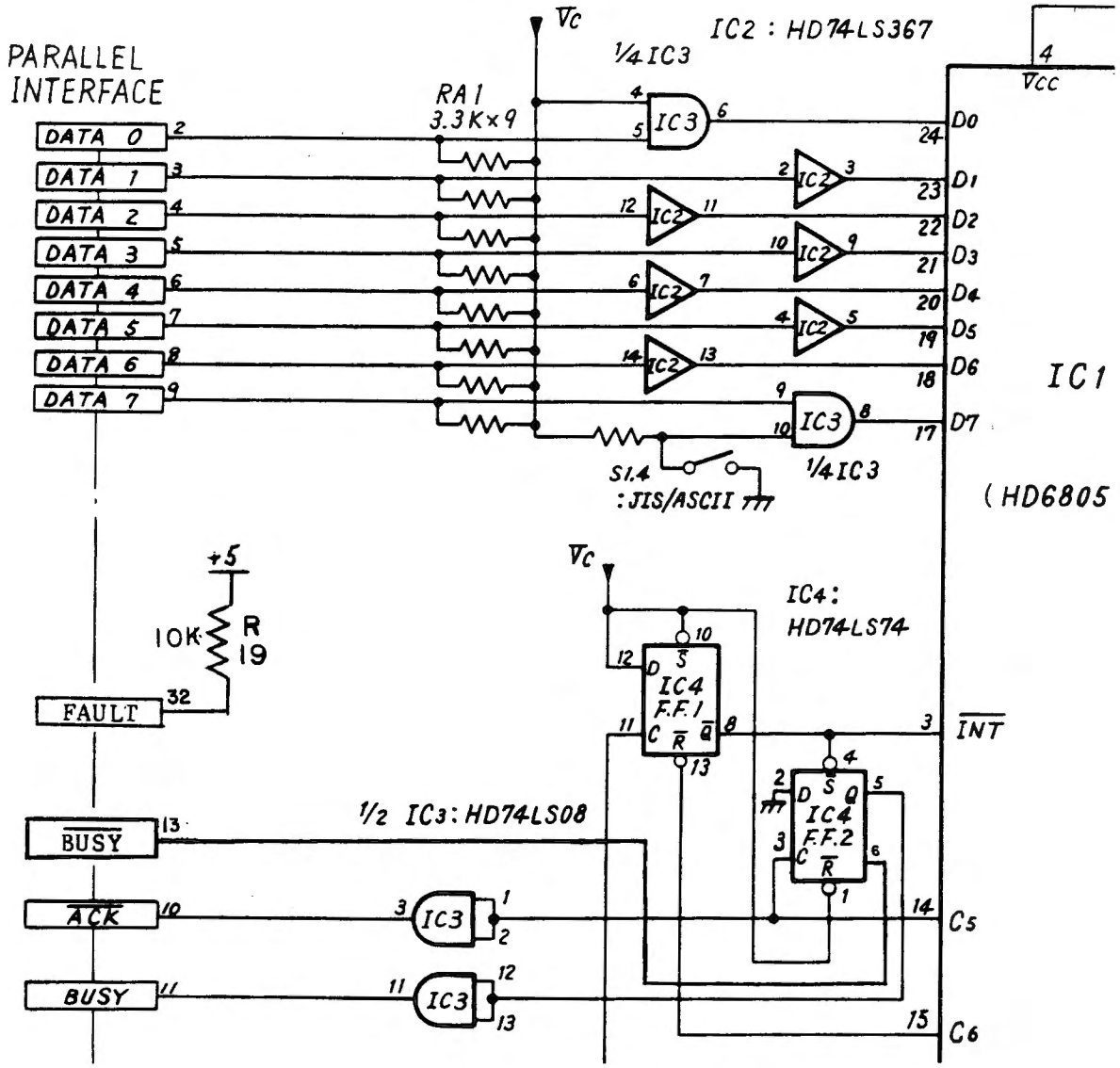

FIGURE 1
SCHEMATIC CHANGES

(4) Connector Pin Layout

1) Parallel Interface

*Connector pin layout

1	STROBE	19	GND
2	D_0	20	GND
3	D_1	21	GND
4	D_2	22	GND
5	D_3	23	GND
6	D_4	24	GND
7	D_5	25	GND
8	D_6	26	GND
9	D_7	27	GND
10	$\overline{ACK}$	28	GND
11	BUSY	29	GND
12	GND	30	GND
13	$\overline{BUSY}$	31	NC
14	GND	32	FAULT
15	NC	33	GND
16	NC	34	NC
17	GND	35	NC
18	5V, 80mA	36	NC

*Input/output terminal connections

FIGURE 2
PARALLEL INTERFACE CONNECTOR

(Top View)

A

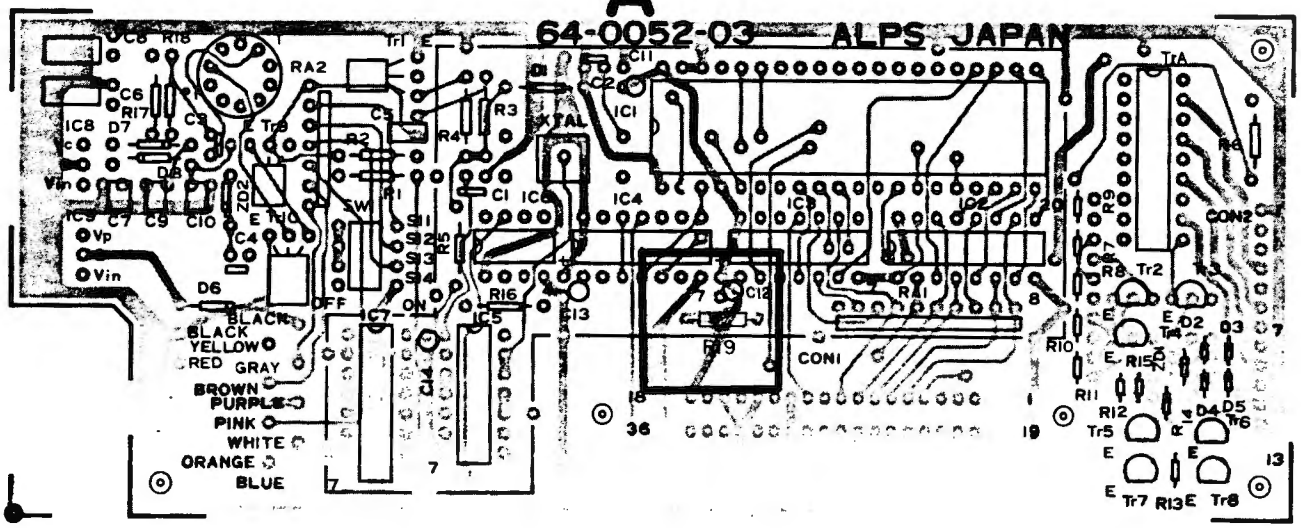

(Bottom View)

B

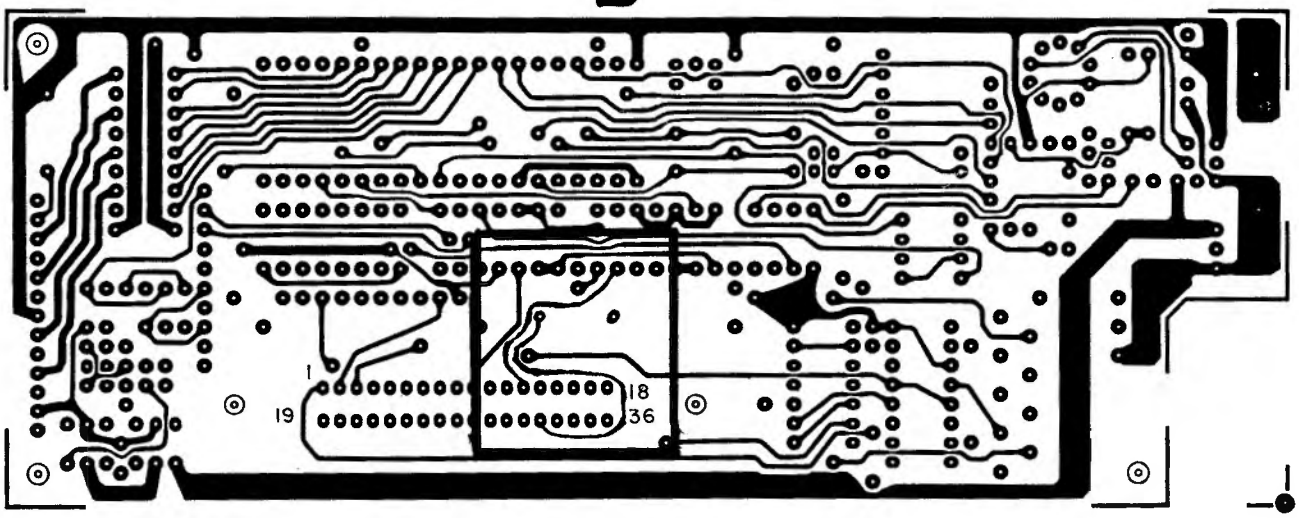

FIGURE 3
PCB CHANGES

DATE: October 26, 1983

REVISION DATE: October 26, 1983

BULLETIN NO.: I/O:55

PRODUCT: 26-6503 16K Memory Expansion Board

SUBASSEMBLY: N/A

PURPOSE: To disable false parity signals and correct memory selecting.

DISCUSSION:

The 16K Memory Expansion board has incorporated on the PCB the option for parity checking. At this time however we do not use this function and the parity RAM and generator IC sockets are left empty. Leaving these sockets empty however causes the parity signals to float which can give an incorrect signal to the rest of the system.

The PAL chip (U34) on the 16K Memory board has a small programing error only noticeable when used in conjuction with the 68000 CPU board. The problem arises when the 68K CPU tries to do a Z-80 access. At this time all Z-80 memory, except for the base page, should not be selectable by the system. The programing of the PAL however does not allow for this if the memory is mapped at the base page.

PROCEDURE:

False parity signals:

Cut the trace between pin 4 of U43 and pin 1 of the bus connector. Refer to Figure 1 for the location of the trace. This modification is **MANDATORY** and should be checked for in all units coming into the shop.

PAL errors:

Replace PAL (U34) with part number (87891107)?.
This modification is only required if the 16K memory board is used in conjuction with the 68K CPU board.

DATE: September 20, 1983

REVISION DATE: November 11, 1983

BULLETIN NO.: I/O:56

PRODUCT: 26-1211 Network 2

SUBASSEMBLY: AXX-7090 Modification kit

PURPOSE: To correct an incompatability of the Network 2 with the Model 100 and the Color Computer 2.

DISCUSSION: Due to timing and level differences, the Network 2 has been found to be incompatible with the Model 100 and the Color Computer 2. The following modification will correct this problem. It should be noted that this modification will eliminate the baud rate switch. In later production this switch will be removed from the unit completely.

PROCEDURE: This procedure involves removing, adding, and changing several parts. Refer to the new schematic, figure 1, to double check the positions of the new parts. The areas within the hash marks reflect the changed or added parts.

A complete fix kit is available from National Parts under part number AXX-7090 26-1211. The parts list below is for your reference only.

PARTS LIST:

QTY.	DESCRIPTION	PART NUMBER	CATALOG NUMBER
1	47 ohm 1/4w 5% carbon	N-0099EEC	26-9999R
1	560 ohm 1/4w 5% carbon	N-0176EEC	26-9999R
2	22K 1/4w 5% carbon	N-0311EEC	26-9999R
1	102K 1/4w 1% metal film	N-0788BEE	26-9999R
5	110K 1/4w 1% metal film	N-0373BEE	26-9999R
1	2.7M 1/4w 5% carbon	N-0456EEC	26-9999R
1	.0022 mfd 50v disk	CF-2136	26-9999C
3	.1 mfd 50v disk	CC-104ZJLP	26-1211
1	MPS3904 transistor	AMX-3583	26-1211

1. Remove R11, R39, and R40.

2. Change the following parts:

   R5 from a 100k resistor to a 22K 1/4w 5% carbon resistor
   R41 from a 10K resistor to a .1 mfd 50v ceramic disk capacitor
   R3 from a 15K resistor to a 110K 1/4w 1% metal film resistor
   R6 from a 1Meg resistor to a 2.7Meg 1/4w 5% carbon resistor
   R8 from a 3.9K resistor to a 560 ohm 1/4w 5% carbon resistor
   R38 from a 10K resistor to a .1 mfd 50v ceramic disk capacitor
   R14 from a 15K resistor to a 102K 1/4w 1% metal film resistor
   R18 from a 1K resistor to a 47 ohm 1/4w 5% carbon resistor
   Q1 from a MPS3906 transistor to a MPS3904 transistor (Emitter to junction of C3 and R10)
   Reverse the polarity of C3 (positive side to junction of Q1 emitter and R10)

3. Add the following parts (Trace side):

   A. Add a 110K 1/4w 1% resistor from the junction of C7 and R12 to +5 volts.
   B. Add a 110K 1/4w 1% resistor from the junction of C7 and R12 to Ground.
   C. Add a 110K 1/4w 1% resistor from the junction of C8 and R4 to +5 volts.
   D. Add a 110K 1/4w 1% resistor from the junction of C8 and R4 to Ground.
   E. Add a 22K 1/4w 5% resistor from the junction of R38 (now a .1 mfd capacitor) and wire #8 of the MPLX-CASS switch to Ground.
   F. Add a .0022 mfd capacitor from the junction of R8 and Q1 Base to the junction of R9 and Q1 Collector.
   G. Add a .1 mfd capacitor from the Base of Q3 to the Collector of Q3.

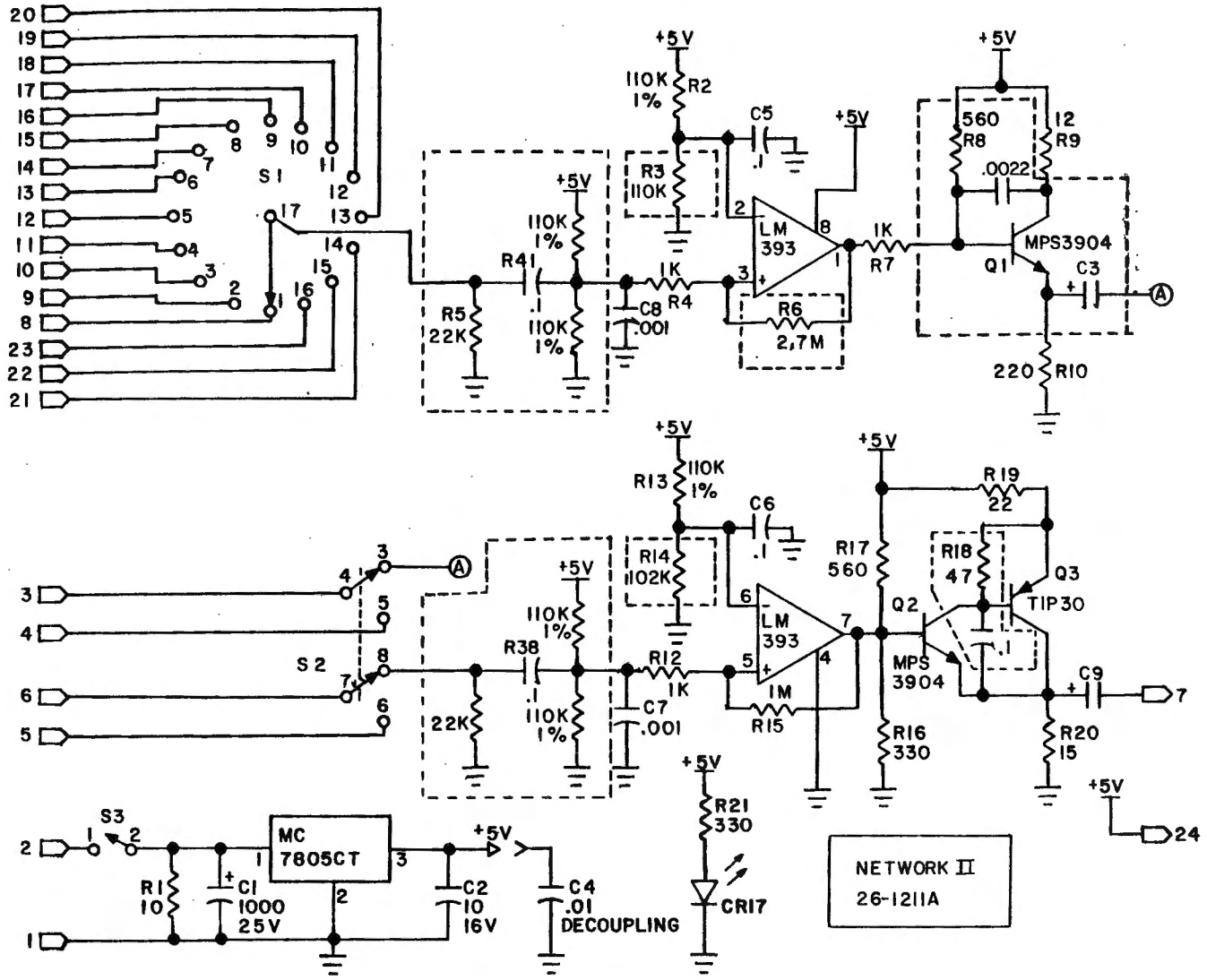
S1
S2
S3
+5V
110K 1%
R2
R3 110K
C5
.1
LM 393
1K
R7
560 R8
12 R9
.0022
MPS3904
Q1
C3
220 R10
R41
R5 22K
C8 .001
R4
R6 2.7M
R13 110K 1%
C6
R14 102K
R38
R12 1K
C7 .001
1M R15
R17 560
R18 47
R19 22
Q2
Q3
TIP30
MPS 3904
C9
R16 330
R20 15
R21 330
CR17
MC 7805CT
R1 10
C1 1000 25V
C2 10 16V
C4 .01 DECOUPLING
NETWORK II
26-1211A

Figure 1

DATE: September 16, 1983

REVISION DATE: September 16, 1983

BULLETIN NO: I/O:57

PRODUCT: 26-1257 DWP-21Ø

SUBASSEMBLY: AX-9352 Main PCB Assembly

PURPOSE: To discuss hammer defeat via the dip switch settings.

DISCUSSION/PROCEDURE: On initial power up the DWP-21Ø reads the dip switch settings. If switch 1 is in the the closed position (parallel) and switch 2 is in the open position (12ØØ baud rate) hammer firing is defeated. This is incorporated into the printer firmware as a troubleshooting aid to inhibit hammer firing. In the parallel printing mode switch 2 must be in the closed position (6ØØ baud rate) for normal operation. This hammer defeat does not affect serial operation.

DATE: September 21, 1983

REVISION DATE: September 21, 1983

BULLETIN NO: I/O:58

PRODUCT: 26-125Ø/26-125ØB DWP-41Ø

SUBASSEMBLY: AX-9276 PCB Control Assembly
AX-9361 Control PCB

PURPOSE: To discuss bit setter adjustment procedure.

DISCUSSION: The bit setter needs to be adjusted anytime the Control PCB is replaced. The reason for this is that the bit setter must be matched with the Space and Select circuitry and motors of the printer it is being installed in. The bit setter will not neccessarily be the same from one printer to another. Replacement boards may also be received from National Parts without any short pins attached to the bit setter. In this case, a coarse alignment will need to be done before the adjustment can be done properly. Normally, the adjustment will not affect initialization, but will affect the timing of the carriage and print wheel during operation.

PROCEDURE: If the printer will not initialize and the bit setter is suspected, treat the four bit setter positions as a binary counter (Refer to Binary Chart on page 2 of 2). Starting at Ø, count up by moving short pins from one position to the next until the printer will initialize. This will allow the printer to run well enough so that proper alignment can be accomplished as outlined on Page 94 of the DWP-41Ø Service Manual. If all positons are used from Ø to 15 and the printer still will not initializate then the bit setter adjustment is not the problem.

Additional short pins may be ordered through National Parts using part number AHC-1785. The cover for the bit setters may be ordered with part number ART-4379, both with catalog number 26-125Ø.

Binary Chart

Bit Setter for Select Motor					Bit Setter for Space Motor				
8	4	2	1		8	4	2	1	
BS1	BS2	BS3	BS4	Count	BS5	BS6	BS7	BS8	Count
Ø	Ø	Ø	Ø	Ø	Ø	Ø	Ø	Ø	Ø
Ø	Ø	Ø	1	1	Ø	Ø	Ø	1	1
Ø	Ø	1	Ø	2	Ø	Ø	1	Ø	2
Ø	Ø	1	1	3	Ø	Ø	1	1	3
Ø	1	Ø	Ø	4	Ø	1	Ø	Ø	4
Ø	1	Ø	1	5	Ø	1	Ø	1	5
Ø	1	1	Ø	6	Ø	1	1	Ø	6
Ø	1	1	1	7	Ø	1	1	1	7
1	Ø	Ø	Ø	8	1	Ø	Ø	Ø	8
1	Ø	Ø	1	9	1	Ø	Ø	1	9
1	Ø	1	Ø	1Ø	1	Ø	1	Ø	1Ø
1	Ø	1	1	11	1	Ø	1	1	11
1	1	Ø	Ø	12	1	1	Ø	Ø	12
1	1	Ø	1	13	1	1	Ø	1	13
1	1	1	Ø	14	1	1	1	Ø	14
1	1	1	1	15	1	1	1	1	15

Legend:

Ø=This position is open without short pin attached
1=This position is shorted with short pin attached

DATE: October 6, 1983

REVISION DATE: October 6, 1983

BULLETIN NO.: I/O:59

PRODUCT: 26-1429 Automatic Power Strip

SUBASSEMBLY: Main PCB

PURPOSE: Unit exhibits repetitive failure -- blows fuses (F1) and the Transient Suppressor, V1 and V2.

DISCUSSION:

The following procedure, when installed, makes the 26-1429 circuitry equivalent to the 26-1429A.

PROCEDURE:

You will need the following parts:

One (1) Transient Suppressor	S14K13Ø	Nat. Parts #AP-7382
One (1) Transient Suppressor	S2ØK13Ø	Nat. Parts #AP-7383

1) Remove the original Transient Suppressors V1 and V2 from the PC board.

2) Install the new V2, S2ØK13Ø, in the two holes vacated by removing V1 and V2. Take great care that the leads of V2 do not touch the GROUND tab. Use short pieces of insulating tubing if necessary. See Figure 1.

3) Install the new V1, S14K13Ø, between the GROUND tab and the MAIN INPUT tab. Make sure that the leads are mechanically secure and as short as possible. Attach the leads as close to the circuit board as possible so that the push on connectors are not obstructed. See Figure 1.

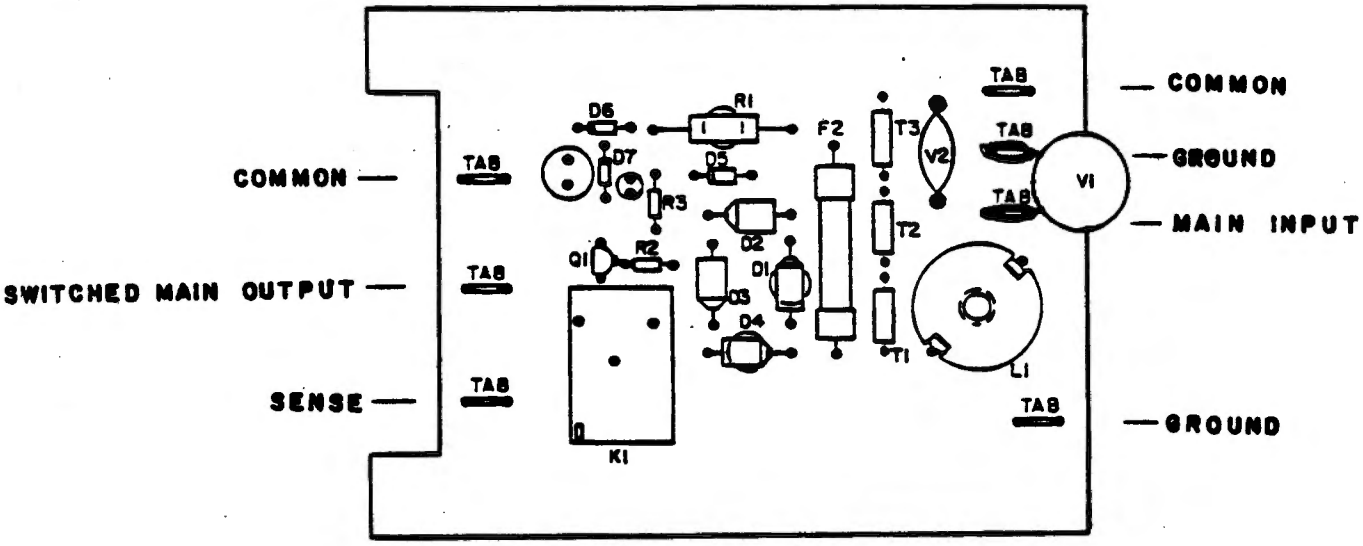
COMMON
SWITCHED MAIN OUTPUT
SENSE
TAB
TAB
TAB
D6
D7
R1
D5
R3
Q1
R2
D2
D3
D1
D4
K1
F2
T3
V2
T2
T1
L1
TAB
TAB
TAB
TAB
V1
COMMON
GROUND
MAIN INPUT
GROUND

FIGURE 1

DATE: October 17, 1983

REVISION DATE: October 17, 1983

BULLETIN NO.: IO:6Ø

PRODUCT: 26-1174 AC-3 Acoustic Modem

SUBASSEMBLY: Switch/LED Printed Circuit Board

PURPOSE: To reduce rush current on power-up which damages power switch.

DISCUSSION: Some of these units have been shipped with a jumper in place of R75 (1Ø ohm). This will cause the power switch to eventually arc and burn out. Replacing the switch without installing the resistor will result in another burned switch. The resistor serves to reduce rush current on power-up.

PROCEDURE: Replace switch as necessary. Locate jumper nearest to the orig-off-ans switch and replace with a 1Ø ohm resistor. Order under stock number 26-9999R, Part N-ØØ63EEC.

DATE: September 15, 1983

REVISION DATE: September 15, 1983

BULLETIN NO: I/O:61

PRODUCT: 26-1256 DMP-21ØØ

SUBASSEMBLY: 26-1441 Bi-directional Tractor Kit

PURPOSE: To outline proper mechanical and electrical adjustments for the DMP-21ØØ Printer and the Bi-directional Tractor Kit.

DISCUSSION: The DMP-21ØØ printer has displayed a problem with intermittent line feeds when used with the Bi-directional Tractor. The platen gear will slip and make a grinding noise causing the paper to not be fed properly. This may occur in all modes of operation, but is especially evident when using special forms and checks where line spacing is critical. To help eliminate this problem the tractor mechanics, printer mechanics, and the +24 printer voltages should be checked to insure proper adjustments are met. The tractor adjustments are **CRITICAL** for proper line feed operation. The printer adjustments can be found in the DMP-21ØØ Service Manual (26-1256) and the tractor adjustments can be found in the Bi-Directional Tractor Kit Manual (26-1441).

PROCEDURE: Make the following checks:

It is recommended that wire feeler gauges be used for these adjustments.

The term backlash in these alignments refer to the amount of "play" between the teeth of the gears.

Printer Mechanical Adjustments (Refer to Figure 1):

1. Locate the platen gear, idle gear, and motor gear on the right hand side of the printer frame.
2. Check the backlash between the idle gear and motor gear, and the backlash between the idle gear and platen gear for Ø.Ø5-Ø.1 mm (Ø.ØØ2-Ø.ØØ4 inch). If the backlash is not correct proceed to next step. If the backlash is correct proceed to step 7.
3. Place the holes of the idle gear over the heads of the two screws securing the idle gear stud assembly and loosen the screws.
4. Rotate the Platen Gear in a forward direction by turning the Platen Knob. This causes the Idle Gear to be rotated and pressed to the Platen Gear.

5. Push the Idle Gear to the Motor Gear with your fingers, and tighten the two screws securing the idle gear stud assembly.
6. Re-check the backlash between the idle gear and motor gear, and the backlash between the idle gear and platen gear for Ø.Ø5-Ø.1 mm (Ø.ØØ2-Ø.ØØ4 inch). If the backlash is not correct repeat steps 3-6.
7. Turn the platen knob and check for smooth gear operation.

Tractor Mechanical Adjustments (Refer to Figure 2):

1. Check the backlash between the tractor gear and its pulley idle gear, and the backlash between the platen gear and its pulley idle gear for Ø.Ø5mm-Ø.1mm (Ø.ØØ2"-Ø.ØØ4"). If these specifications are not met adjustments are required.
2. To adjust the backlash between the tractor gear and its pulley idle gear, loosen the screw holding the idle gear and move as required to met the Ø.Ø5-Ø.1mm (Ø.ØØ2"-Ø.ØØ4") specification then retighten screw. The tractor mechanism does not have to be on the printer to perform this adjustment.
3. To adjust the backlash between the platen gear and its pulley idle gear the tractor mechanism must be on the printer. Loosen the screw holding the idle gear and move as required to met the Ø.Ø5-Ø.1mm (Ø.ØØ2"-Ø.ØØ4") specification then retighten screw.
4. Recheck the backlash between the tractor gear and is pulley idle gear, and the backlash between the platen gear and its pulley idle gear for Ø.Ø5-Ø.1mm (Ø.ØØ2"-Ø.ØØ4"). Repeat steps 2 and 3 until these specifications are met.

Power Supply +24 volt adjustment:

1. To perform this adjustment remove the two screws holding the power supply frame to the printer chassis. Slide the power supply out the rear of the printer far enough to gain access to PJ42.
2. Check the voltage while the printer is under load, such as performing self test. Also make sure the tractor is attached.
3. With a digital voltmeter read the voltage between PJ42 pin 15 and ground. Adjust RV1 so the this voltage does not drop below +24.5. This voltage should fluctuate between about +24.5 and +24.8.

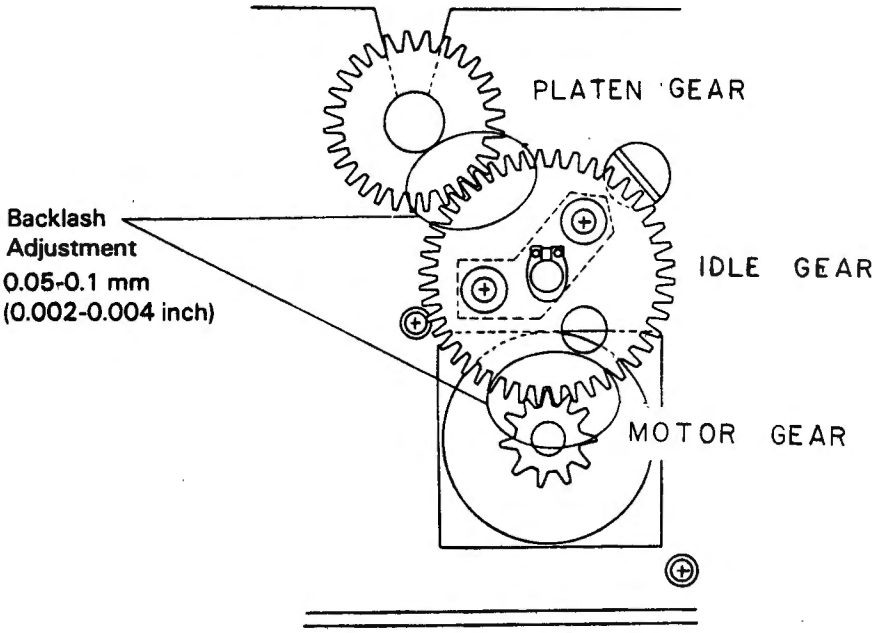

Figure 1

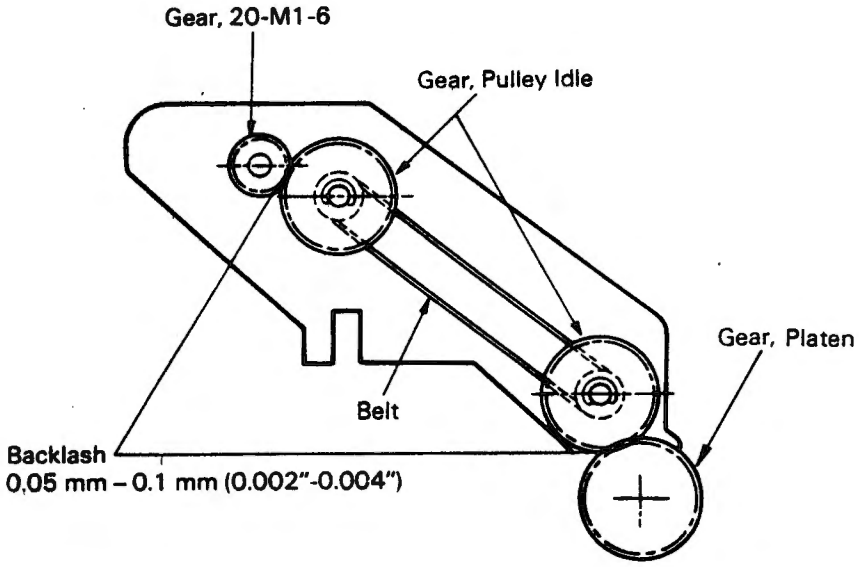

Figure 2

DATE: November 3, 1983

REVISION DATE: November 3, 1983

BULLETIN NO.: I/O:62

PRODUCT: 26-6013 Multi-Terminal Interface Board

SUBASSEMBLY: N/A

PURPOSE: To correct intermittent operation and increase reliablity.

DISCUSSION:

Two possible problems have been found with the Multi-Terminal Interface PCB. The first correction only involves **REV 1** boards. The second involves ALL revisions.

Figure 1 is the component layout of a **REV** - or revision blank PCB. The problem with **REV 1 PCB's only** involves R13 and R21. Refering to Figure 1, R21 is located just above U26 and R13 (silk screen only, a resistor is not there) is located just below U2. On REV 1 boards the resistor located above U26 is missing and the resistor that's below U2 is incorrectly labeled R21. This resistor should be labeled R13.

It has been found that the RS-232 receivers and transmitters are reaching their current sinking limitations. To reduce the current, which will reduce the operating tempature, of these IC's the pull-up value needs to be increased. This modification applies to **ALL** revision boards.

PROCEDURE:

REV 1 only:
Refer to Figure 2 and add a 4.7K ohm 1/4 watt pull-up resistor from pin 5 of U26 to +5 volts.

ALL boards:
This modification requires 12 4.7K ohm 1/4 watt resistors. Replace R1, R2, R3, R4, R5, R6, R7, R8, R9, R10, R11, and R14 from 2.2K resistor to a 4.7K.

A 4.7K 1/4 watt 5% resistor can be ordered from National Parts under part number N-0247BEC and catalog number 26-9999R.

SHOULD REMAIN 2.2KΩ

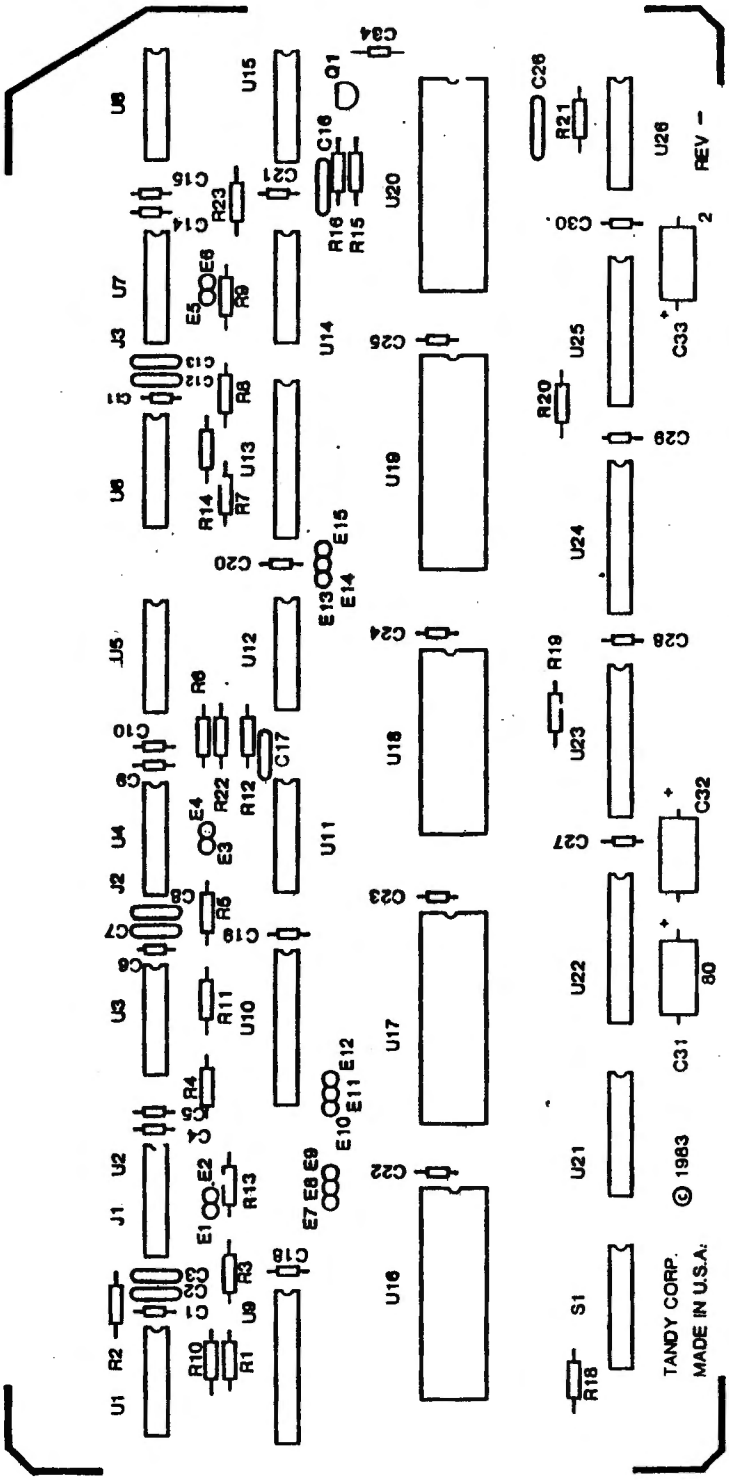

Figure 1 Component Layout

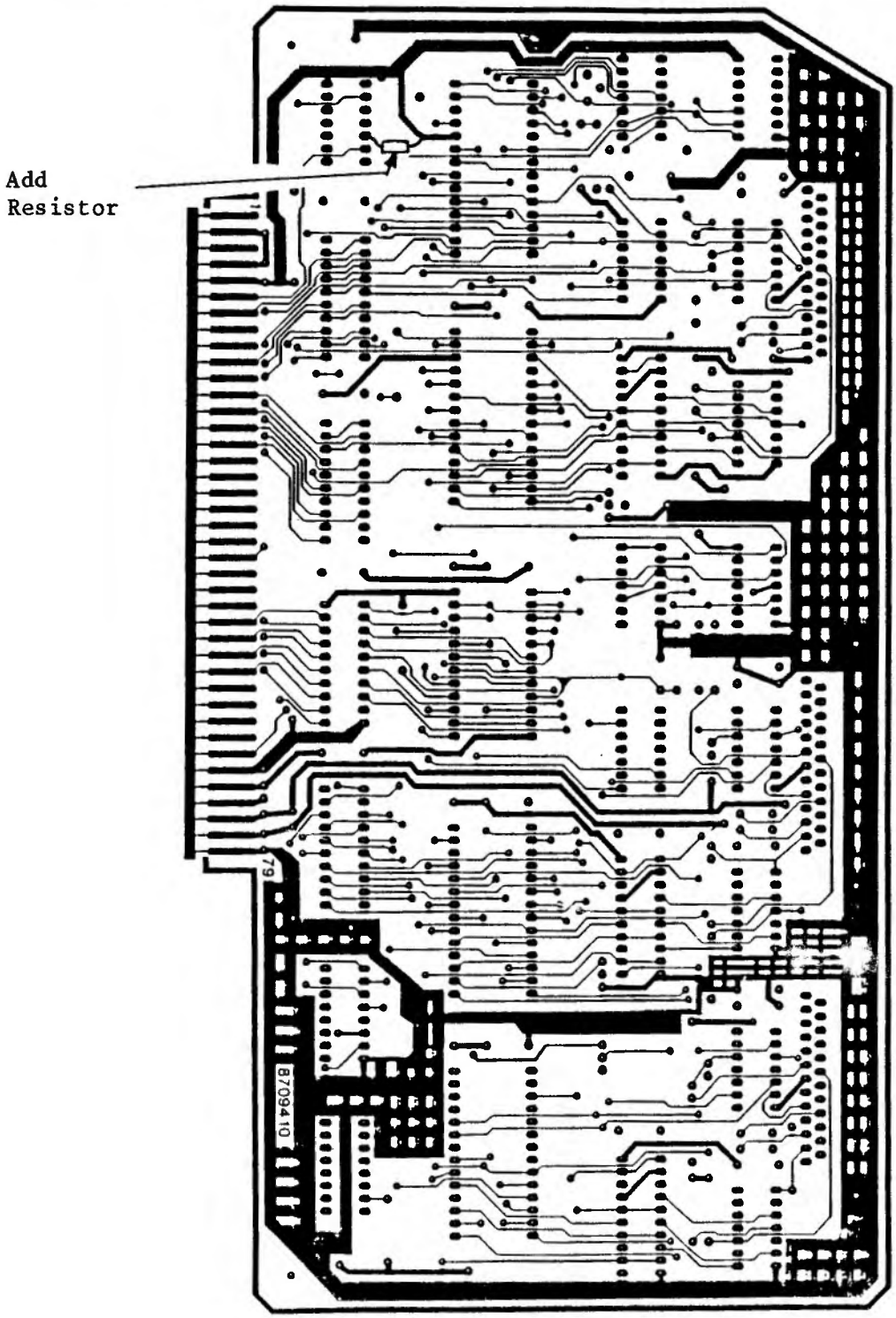

Figure 2 Circuit Trace (solder side)

DATE: December 15, 1983

REVISION DATE: December 15, 1983

BULLETIN NO.: I/O:63

PRODUCT: 26-1173 Modem II

SUBASSEMBLY: AX-9195 Logic Board

PURPOSE: Enables Modem II use with TRS-XENIX.

DISCUSSION:

It is necessary to modify a Modem II if it will be used on a Xenix system. The modification will eliminate the forced carrier detect to U7. **After performing this modification the Modem II will not autodial from TRSDOS, it will work in the manual mode only.** The autodial function will work from Xenix.

PROCEDURE:

Clip the collector lead of Q1. Cut it close to the PCB such that it may be soldered back if the modem will be used in the autodial mode with TRSDOS.

Radio Shack

COMPUTER TECHNICAL SUPPORT 0220 817-390-3969

400 ATRIUM – ONE TANDY CENTER, FORT WORTH, TX 76102

DATE: February 28, 1984

TO: All Computer Service Personnel

FROM: Ken Brookner, Technical Coordinator

SUBJECT: Rescind Technical Bulletin I/O:64

FILE: PTC-64 Printer Spooler (26-1269)

Remove and discard Technical Bulletin I/O:64 (revision date January 20, 1984). This bulletin has been found to be in error and will be re-released if necessary as soon as new data is available.

The next I/O Bulletin will be released as I/O:64 to eliminate any gaps in the series.

DATE: December 2Ø, 1983

REVISION DATE: June 1, 1984

BULLETIN NO.: I/O:64

PRODUCT: 26-1256 DMP 21ØØ

SUBASSEMBLY: AX-9319 Control PCB

PURPOSE: Modification to BUSY* and FAULT* status lines.

DISCUSSION: For a DMP-21ØØ printer to work correctly when the BUSY* and FAULT* signals are being utilized, 4.7K ohm pullup resistors need to be added to these lines.

PROCEDURE:

Make the following cuts on the component side of the board (Refer to Figures 1 and 3):

Cut the trace going from IC97 pin 1Ø to IC1Ø6 pin ~~X~~.3
Cut the trace going from IC97 pin 6 to IC1Ø6 pin ~~X~~.2

Jumper the following points on the foil side of the board (Refer to Figures 2 and 3):

Jumper PJ32 pin 27 to IC1Ø6 pin ~~X~~.2
Jumper PJ32 pin 3Ø to IC1Ø6 pin ~~X~~.3

NOTE: IC1Ø6 is an eight (8) pin resistor pack and not an IC chip. Also, FAULT* and BUSY* are labled as FAULTØ and BUSYØ on the DMP21ØØ schematic.

X- updates as of MAY 20., 85

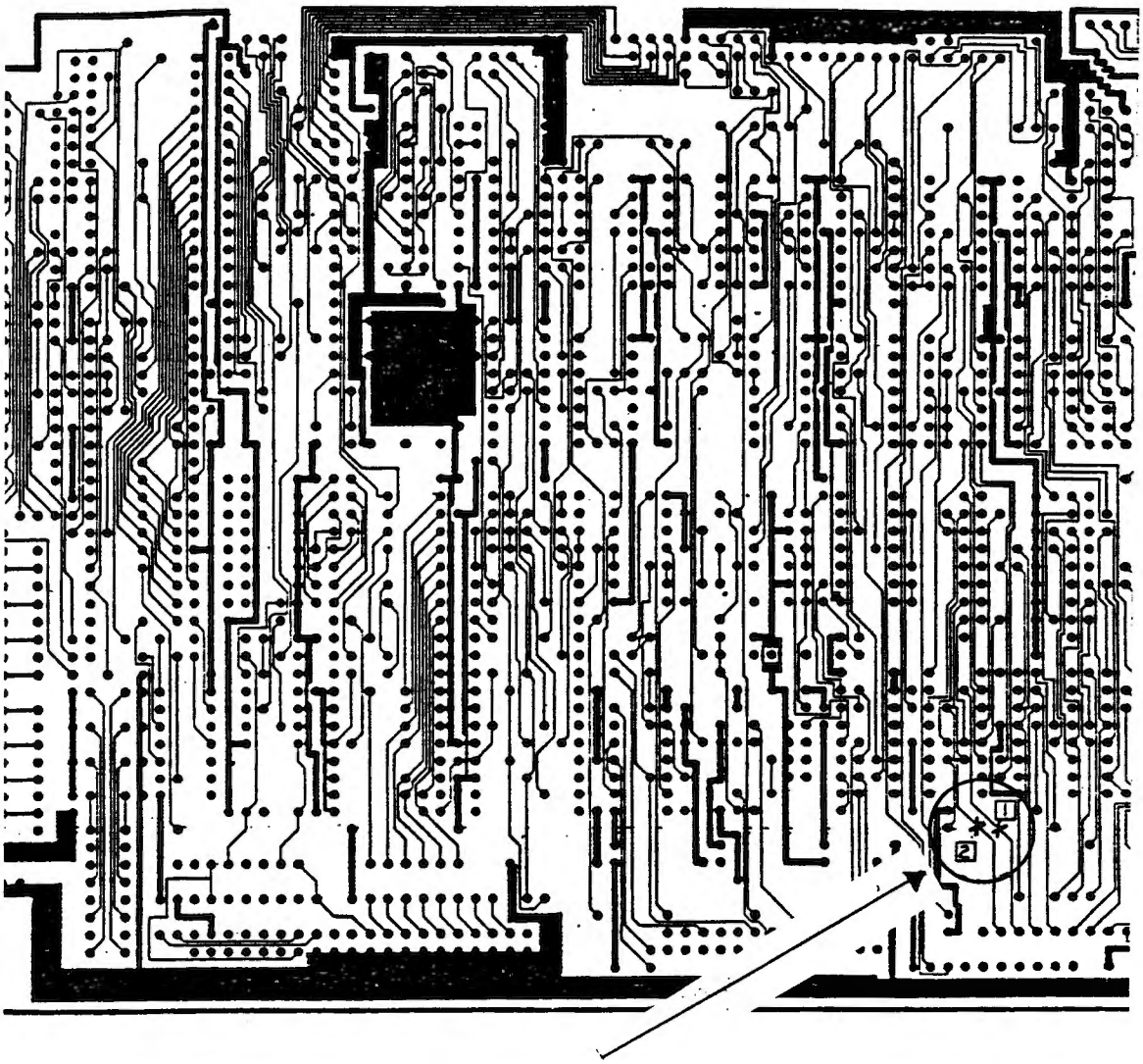

1. Cut the trace going from IC97 pin 1Ø to IC1Ø6 pin ~~2~~ 3
2. Cut the trace going from IC97 pin 6 to IC1Ø6 pin ~~1~~ 2

Figure 1

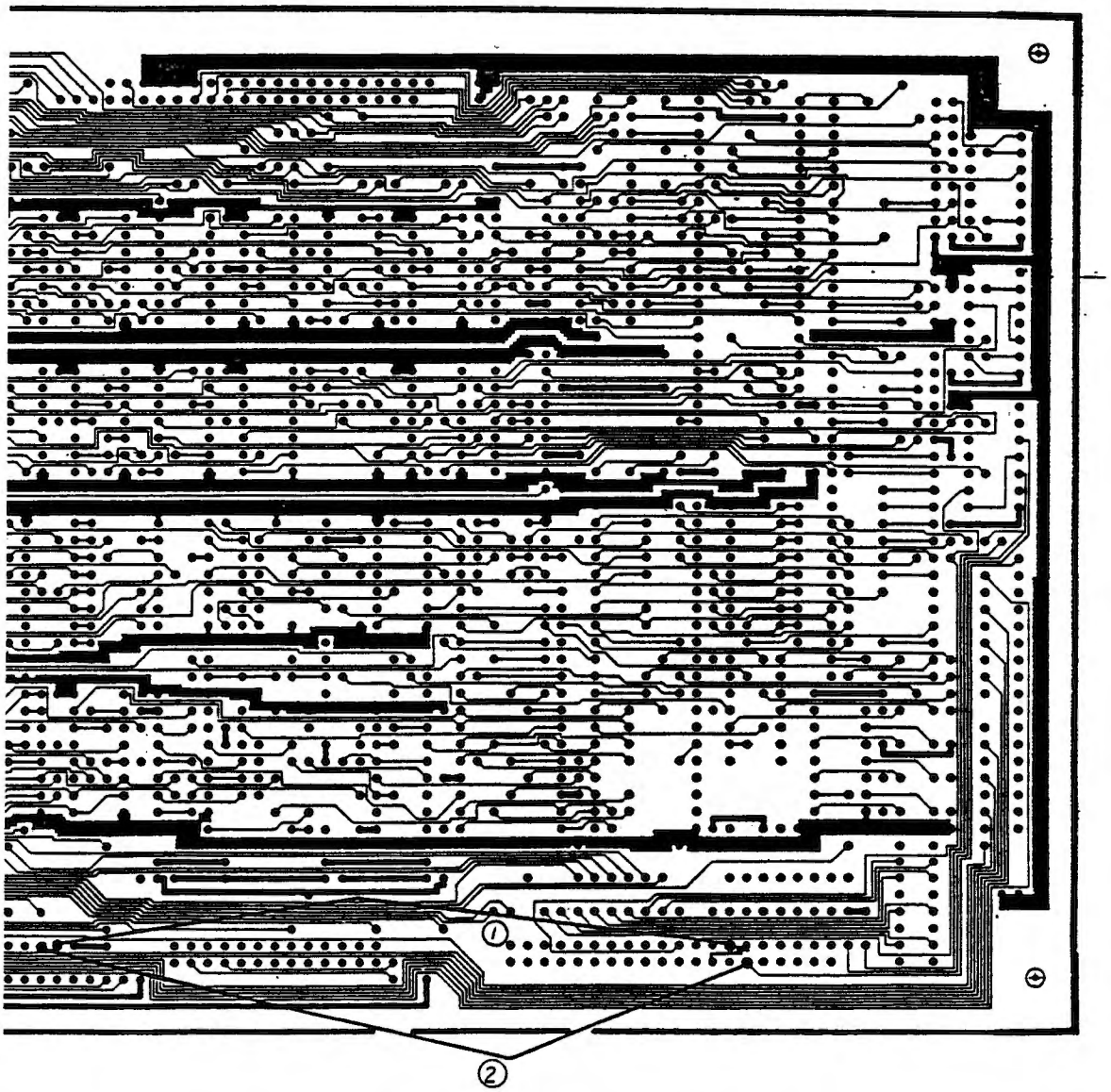

1. Jumper PJ32 pin 27 to IC1Ø6 pin ~~1~~ 2
2. Jumper PJ32 pin 3Ø to IC1Ø6 pin ~~2~~ 3

Figure 2

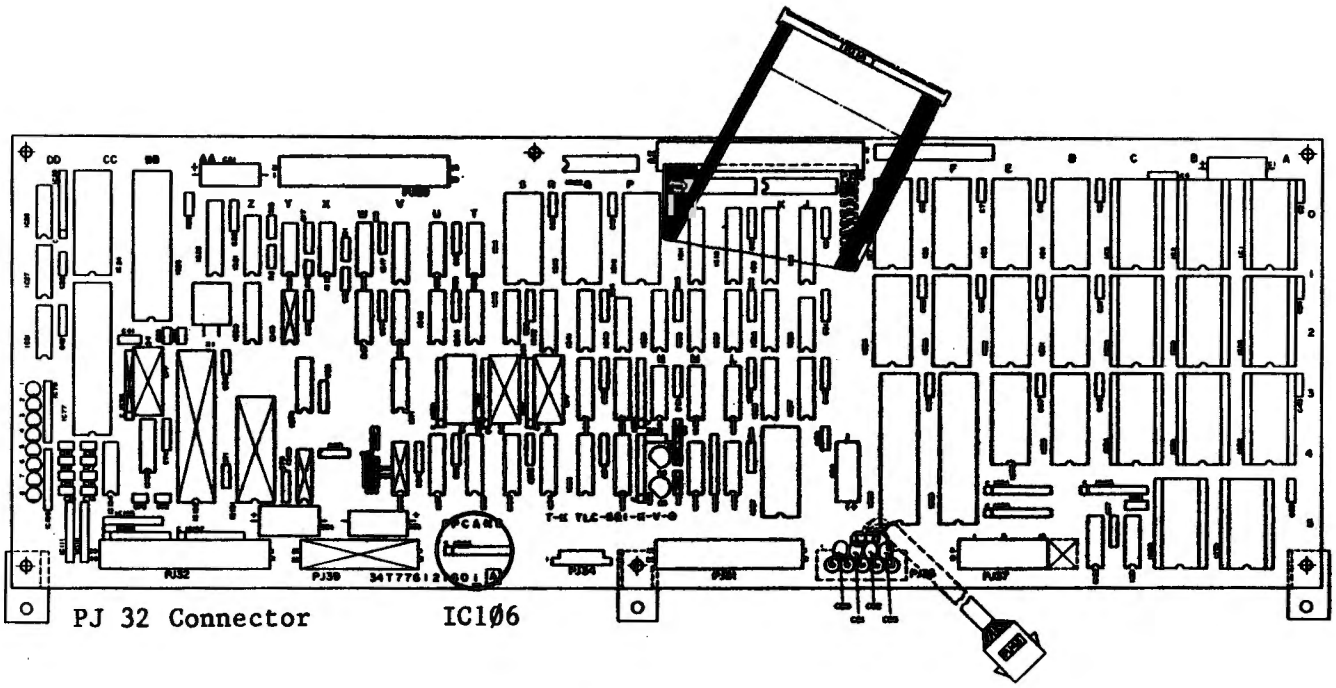

Figure 3

DATE: December 2Ø, 1983

REVISION DATE: December 2Ø, 1983

BULLETIN NO.: I/O:64

PRODUCT: 26-1256 DMP 21ØØ

SUBASSEMBLY: AX-9319 Control PCB

PURPOSE: Modification to BUSY* and FAULT* status lines.

DISCUSSION: For a DMP-21ØØ printer to work correctly when the BUSY* and FAULT* signals are being utilized, 4.7K ohm pullup resistors need to be added to these lines.

PROCEDURE:

Make the following cuts on the component side of the board (Refer to Figures 1 and 3):

Cut the trace going from IC97 pin 1Ø to IC1Ø6 pin 2.
Cut the trace going from IC97 pin 6 to IC1Ø6 pin 1.

Jumper the following points on the foil side of the board (Refer to Figures 2 and 3):

Jumper PJ32 pin 27 to IC1Ø6 pin 1.
Jumper PJ32 pin 3Ø to IC1Ø6 pin 2.

NOTE: IC1Ø6 is an eight (8) pin resistor pack and not an IC chip. Also, FAULT* and BUSY* are labled as FAULTØ and BUSYØ on the DMP21ØØ schematic.

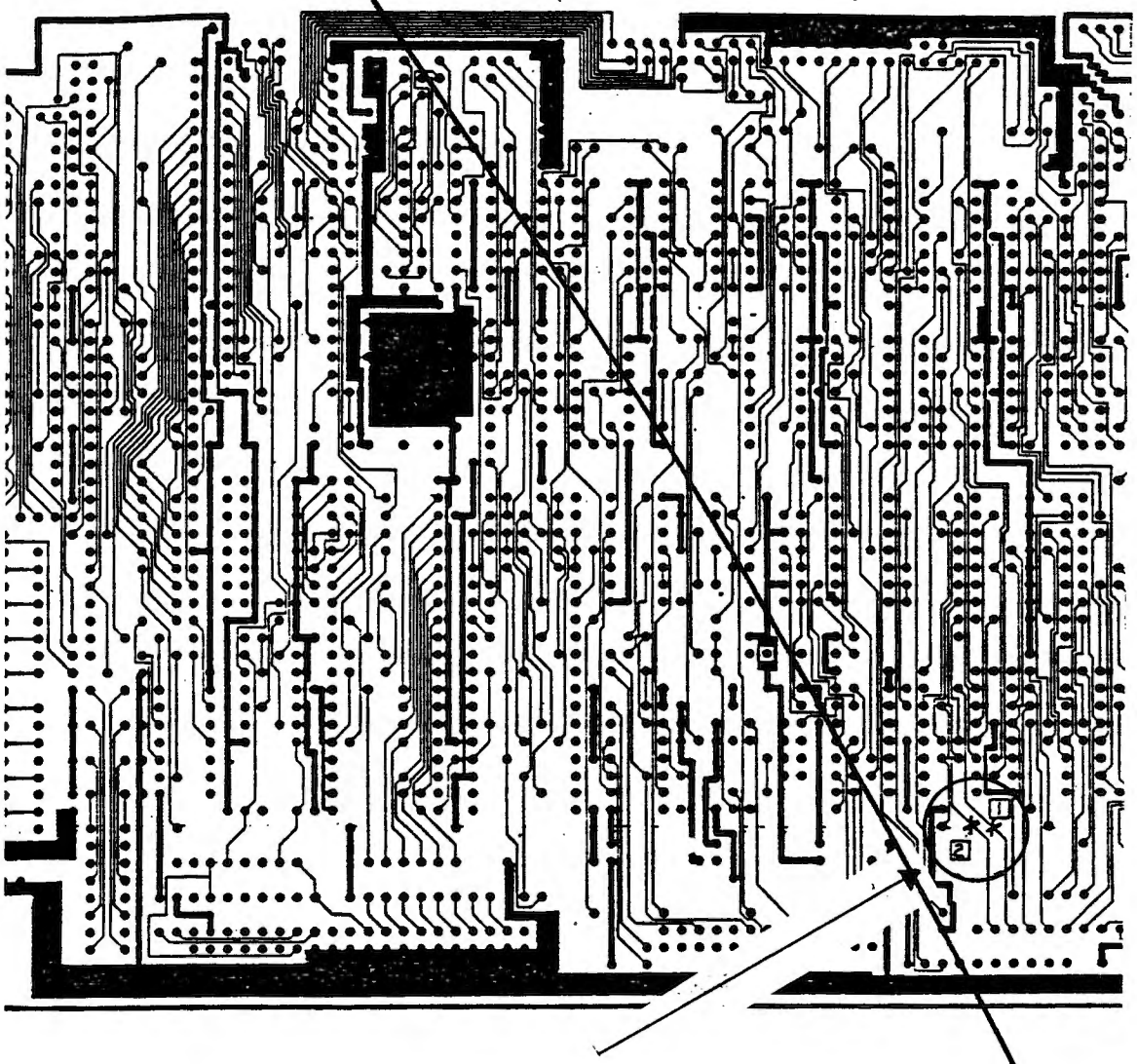

1. Cut the trace going from IC97 pin 1Ø to IC1Ø6 pin 2
2. Cut the trace going from IC97 pin 6 to IC1Ø6 pin 1

Figure 1

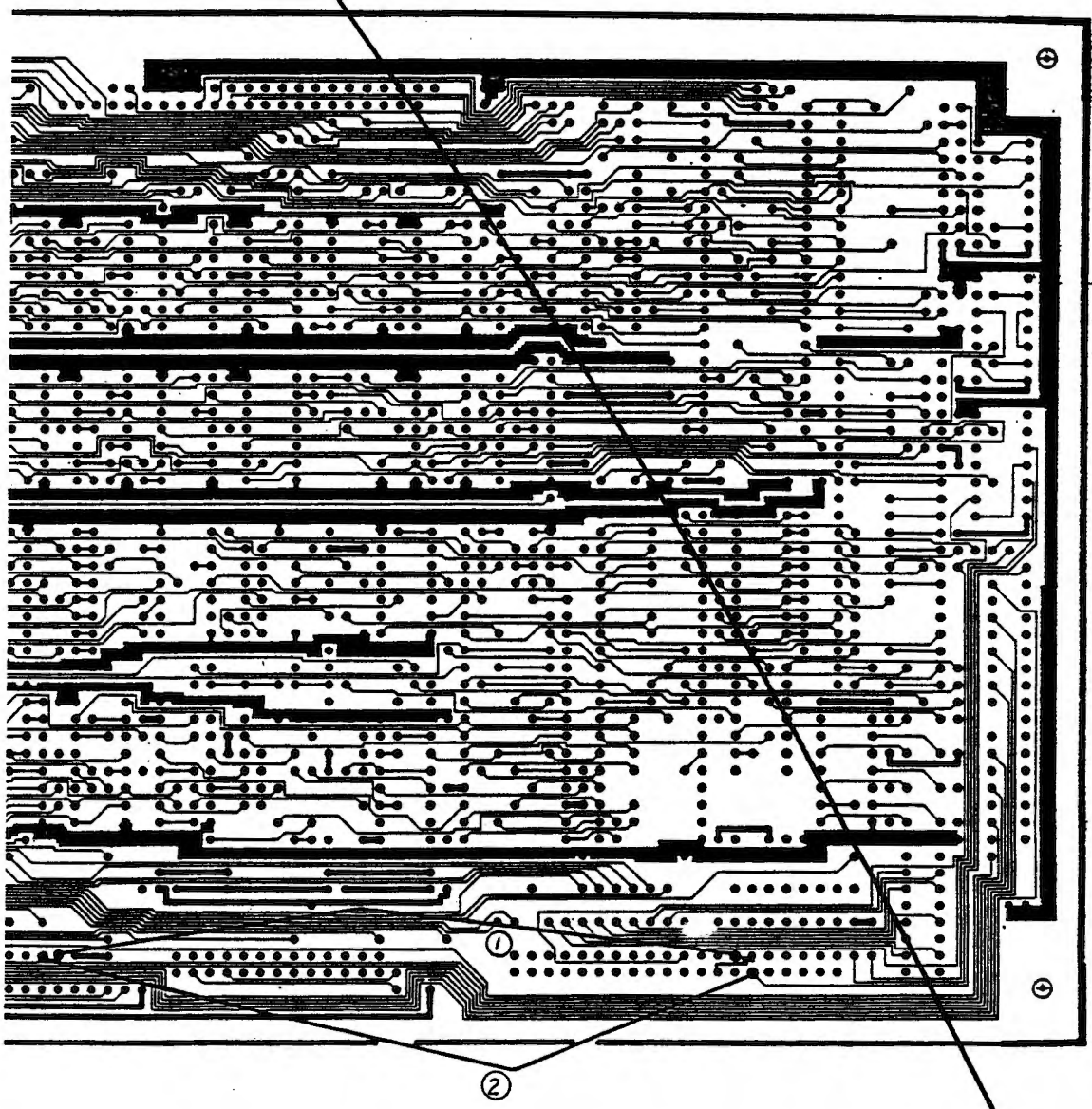

1. Jumper PJ32 pin 27 to IC1Ø6 pin 1
2. Jumper PJ32 pin 3Ø to IC1Ø6 pin 2

Figure 2

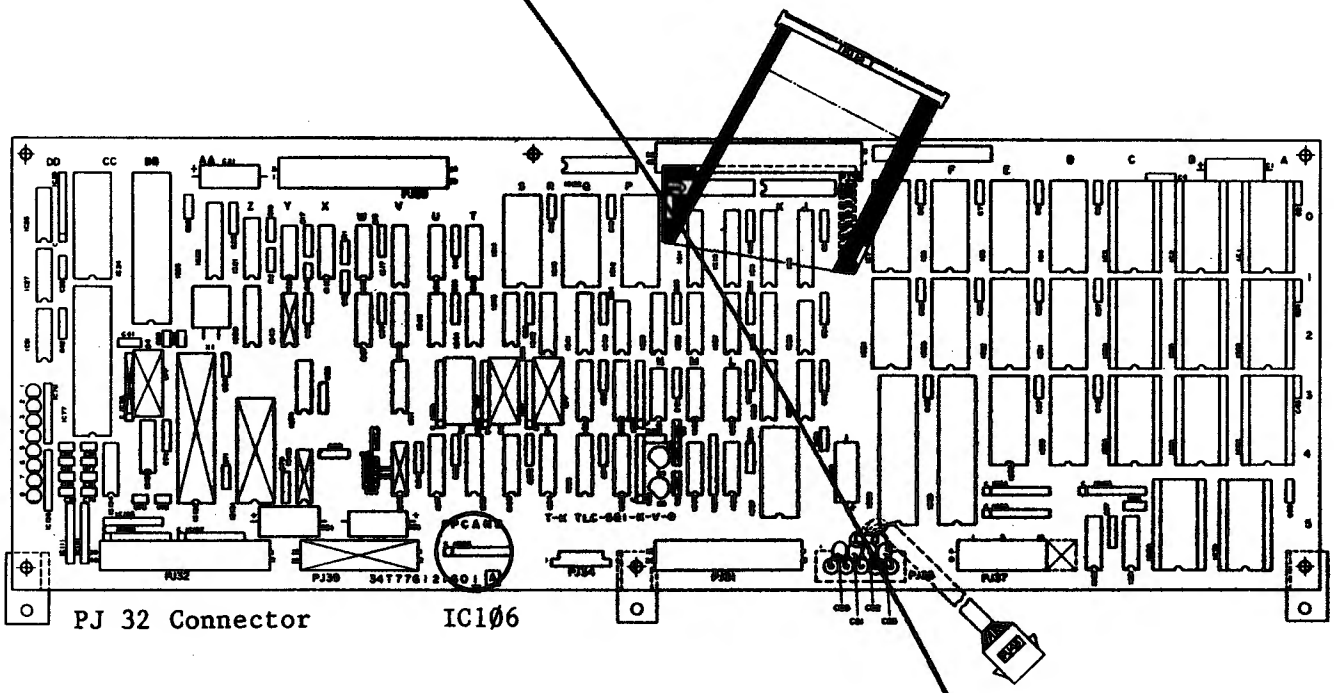

Figure 3

DATE: January 2Ø, 1984

REVISION DATE: January 2Ø, 1984

BULLETIN NO.: I/O:64

PRODUCT: 26-1269 PTC-64 Printer Controller

SUBASSEMBLY: AX-9412Ø Logic PCB (Rev A)

PURPOSE: Modification to correct artwork error.

DISCUSSION: Due to an artwork error the ground and source voltage were not applied to U7 correctly. To correct this problem a modification needs to be done to the Printer Controller (Rev A only). All units in for service **MUST** be checked for this modification.

PROCEDURE:

Make the following cuts:

1. On the foil side of the PCB, cut the trace right at U7 pin 1.
2. On the component side of the PCB, cut the trace right at U7 pin 2Ø.

Make the following jumpers on the foil side of the PCB:

1. Jumper U7 pin 1 to J2 pin 2Ø.
2. Jumper U7 pin 2Ø to the heavy trace (+5V) connected to C11.

DATE: February 2, 1984

REVISION DATE: December 28, 1982

BULLETIN NO.: I/O:65

PRODUCT: 26-1158 Daisy Wheel II Printer

SUBASSEMBLY: AX-9063 Power Supply Unit New Style

PURPOSE: To provide information on the new power supply unit for the Daisy Wheel II Printer.

DISCUSSION: Attached are the instructions for jumpering the board for 110 volts operation, pin assignments for the DC harness, and the schematic for the board.

4. OUTPUT VOLTAGE

4-1. Output Voltage Rating

Power supply	+5 V	+15 VH	−15 VH	+15 VH	−15 VL
Application	Logic	Mechanism drive	Mechanism drive	Linear circuit	Linear circuit
Output voltage*	+5 V ±5% DC	+15 V ±10% DC	−15 V ±10% DC	+15 V ±5% DC	−15 V ±5% DC
Output	Continuous rating 3.0 A or less	Continuous rating 3.5 A or less	Continuous rating 3.0 A or less	Continuous rating 0.3 A or less	Continuous rating 0.3 A or less
Range of load variation	1 ~ 3.0 A	1 ~ 10 A 30% at duty cycle 18 ms	1 ~ 10 A 30% at duty cycle 18 ms	0.05 ~ 0.30 A	0.05 ~ 0.30 A
Ripple voltage	50 mVp-p	–	–	30 mVp-p	30 mVp-p
Noise voltage	200 mVp-p	–	–	300 mVp-p	300 mVp-p

Note 1: The above values are applicabe to the case where adjustment is made to 5.05±0.05 V under maximum load (within rated load).

Note 2: H: High power
L: Low power

4-2. Output Terminal List

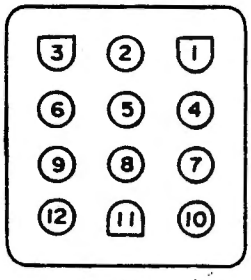

Top View

Connector Designators		Signal Description	Board Designators
Pin No.	1	+5 volts	Tab 2
	2	Vacant	
	3	Vacant	
	4	+15 VH	Tab 5
	5	Vacant	
	6	+15 VL	Tab 8
	7	-15 VH	Tab 3
	8	Vacant	
	9	-15 VL	Tab 6
	10	Ground	Tab 1
	11	Ground	Tab 4
	12	Ground	Tab 7

METHOD OF SWITCHING OF EXTERNAL POWER SUPPLY

Switching of the external power supply (power input) can be made between 100 V system and 200 V system by changing connection of jumper wires on the PCB.

For Using 100 V System as External Power Supply

Connect 100 V terminals with marks by using jumper wires.
No jumper wire for 200 V terminals.

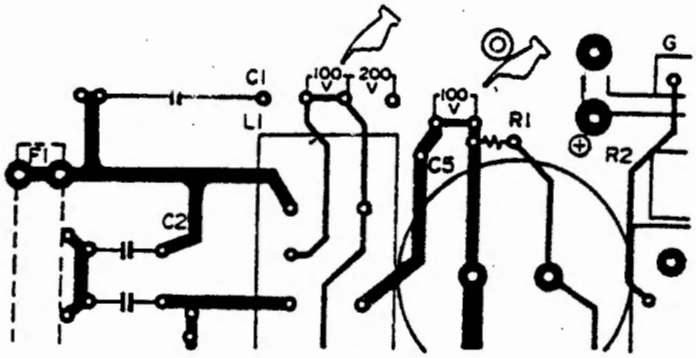

Fig. 3

For Using 200 V System as External Power Supply

Connect 200 V terminals with mark by using a jumper wire.
No jumper wires for 100 V terminals.

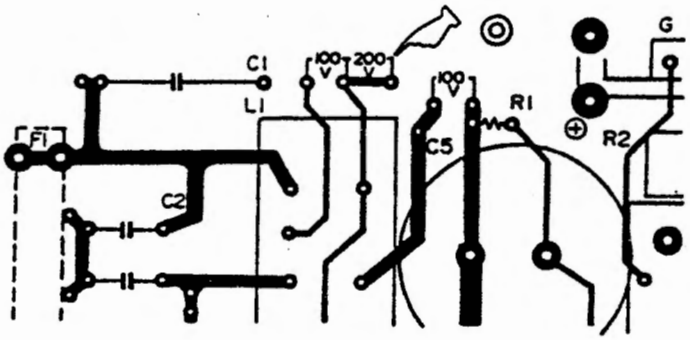

Fig. 4

TRS-80®

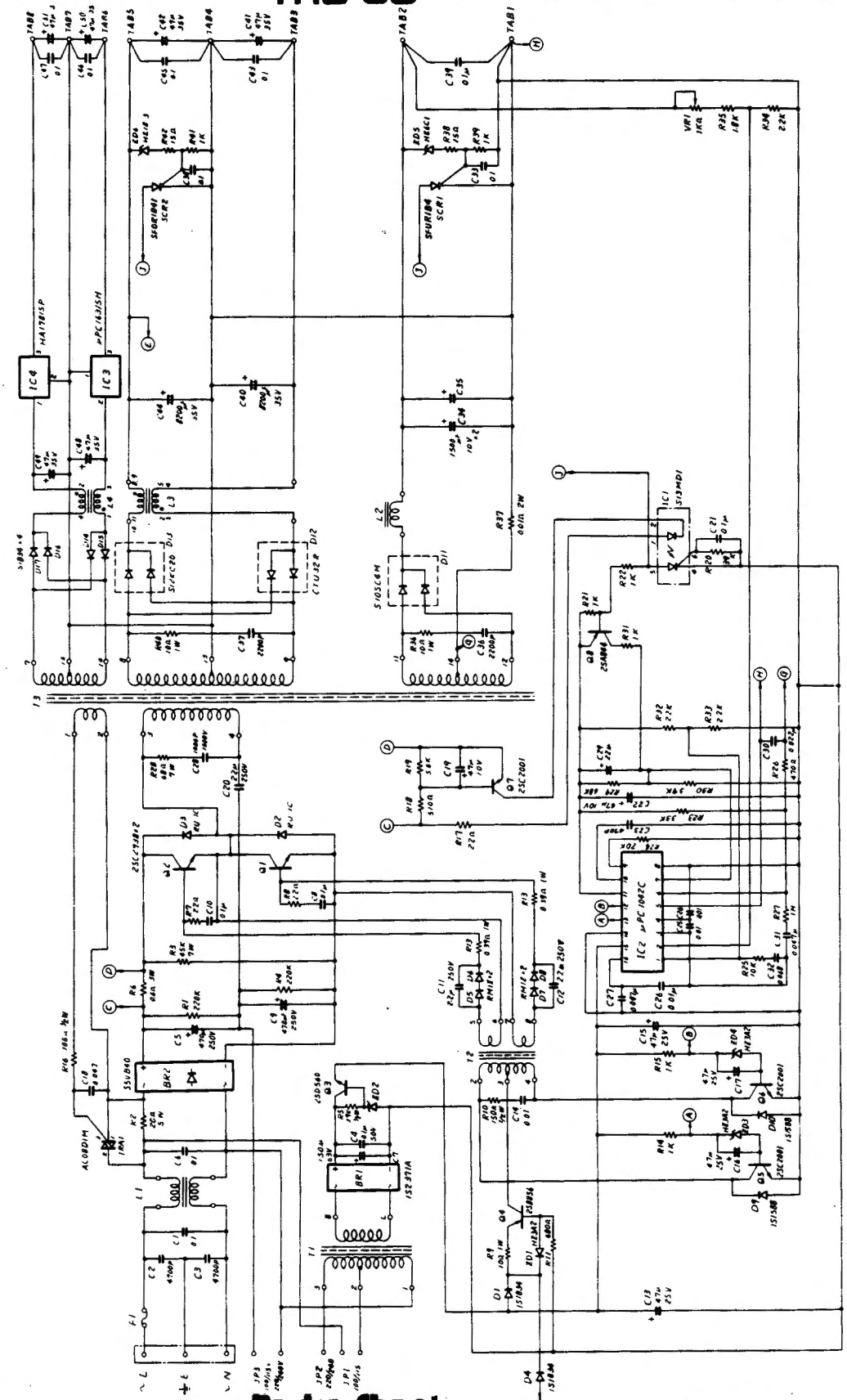

Radio Shack

DATE: May 8, 1984

REVISION DATE: July 17, 1984

BULLETIN NO.: I/O:66

PRODUCT: 26-6Ø5Ø DT1 Terminal

SUBASSEMBLY: AX-9258 Main PCB

PURPOSE: To prevent or cure problems with printing and/or unit going into monitor mode.

DISCUSSION:

Two problems have been found with the ROM code in the processor of the DT1. The first being video related and the second printer related.

When using the DT1 terminal, some remote HOST systems use the cursor position mode. In some instances when the remote HOST addresses column 53, the DT1 will enter the monitor mode. This problem will occur in the TELEVIDEO 91Ø, the LEAR SIEGLER ADM-5, and the HAZELTINE-141Ø modes. The ADDS-25 mode does not exhibit this problem.

The printing problem has been determined to have two causes: Interference from interrupts occurring at the wrong time, and the printer port being addressed "too wide".

The video and printer interrupt problems are cured with new software in the form of a new operating system for the DT1, supplied in the ROM of the processor IC. The printer port addressing problem is cured by modifying the DT1 PCB to further restrict the addresses of the printer port.

Current production units will contain the new processor and the PCB changes.

PROCEDURE:

PARTS REQUIRED

Description	N.P. Number	Catalog Number
4.7K 1/4 watt 5% resistor	N-Ø247EEC	26-9999R
2.2K 1/4 watt 5% resistor	N-Ø216EEC	26-9999R
74LS374 IC	AMX-3928	26-113Ø
New Processor IC	MX-598Ø	26-6Ø5Ø

1. Change U24 from a 74LS373 to a 74LS374.
2. Change U12 from the old processor to the new processor.
3. On the foil side, cut the trace that connects U3Ø pin 9 to the first feedthrough. The feedthrough is in line with pin 1Ø.
4. On the foil side, cut the trace between U3Ø pin 1Ø and U3Ø pin 11.
5. Add a 4.7K resistor from U3Ø pin 1Ø to U3Ø pin 14.
6. Add a 2.2K resistor at position "R22" on the PCB.
7. On the component side, add a jumper wire from U3Ø pin 1Ø to U11 pin 1Ø.
8. On the component side, add a jumper wire from U3Ø pin 9 to U13 pin 11.
9. On the component side, add a jumper wire from U16 pin 9 to U13 pin 13.
1Ø. On the component side, add a jumper wire from U11 pin 11 to U3Ø pin 5.

SYSTEM CHECKOUT:

After making the modifications check the unit for proper operation. You will need a Model II, 12, 16, or 16B, a printer and suitable cables to interconnect the three units. Hook up the system, with the printer connected to the DT1, and turn all units on. Go to the DT1 SETUP mode by typing:

<SHIFT><CONTROL><ENTER>

and set it up as follows:

TC1	TCØ	EM1	EMØ	REV	DTR	DSR	DCD
Ø	Ø	1	Ø	Ø	Ø	1	Ø
STB	O/E	PAR	WDL	BR3	BR2	BR1	BRØ
Ø	Ø	Ø	Ø	Ø	1	Ø	Ø
			ALF	AWP	F/H	CT1	CTØ
			Ø	1	Ø	Ø	1

Type **<ENTER>** and answer **<N>** to the "STORE PERMANENTLY?" question. Return to the terminal mode by typing **<SHIFT><CONTROL><ENTER>**.

Boot TRSDOS on the host computer and at TRSDOS READY type:

SETCOM A=(3ØØ,8,N,1)

After TRSDOS READY returns from SETCOM, type **HOST ON**. Answer the "BREAK DISABLE" question with **<N> <ENTER>**. The TRSDOS READY message and the dotted line should appear at both the host computer and the DT1.

At the DT1 type:

<SHIFT><CONTROL><ESCAPE> and then type **<CONTROL><R>**.

This activates the printer. Type **<ENTER>** and the TRSDOS READY and dotted line should appear at the host computer, the DT1, and the printer. At the DT1 type **DIR**, and a directory of the disk in drive Ø of the host computer should be sent to the DT1 and the printer. Try printing the directory a few times checking for missing or added charactors.

When convinced the unit is printing properly type:

<SHIFT><CONTROL><ESCAPE> and then type **<CONTROL><T>**.

This deactivates the printer. Type **<ENTER>** and the TRSDOS READY message and dotted line should appear only at the host computer and the DT1.

To check out the video problem the DT1 emulation needs to be changed to the TELEVIDEO 91Ø, LEAR SIEGLER ADM-5, or the HAZELTINE-141Ø. This can be done by going to the SETUP mode as previously mentioned and changing the EM1 and EMØ parameters as follows:

Emulation Type	EM1	EMØ
TELEVIDEO 91Ø	Ø	Ø
LEAR SIEGLER ADM-5	Ø	1
HAZELTINE 141Ø	1	1

After selecting one of the above emulations exit the SETUP mode as explained previously. Press **<BREAK>** to get you back to the TRSDOS READY prompt and then type **BASIC <ENTER>**. On either the DT1 or the HOST keyboard type in the following program:

```
1Ø ES$=CHR$(27):CL$=CHR$(26)
2Ø LC$=CHR$(61)
3Ø PRINT CL$:INPUT"ENTER ROW POSITION";RO
4Ø INPUT"ENTER COLUMN POSITION";CO
5Ø INPUT"ENTER STRING TO BE DISPLAYED";ST$
6Ø DT$=ES$+LC$+CHR$(RO+32)+CHR$(32+CO)
7Ø PRINT DT$;ST$:INPUT"AGAIN";A$
8Ø IF A$="END" THEN END
9Ø GOTO 3Ø
```

The DT1 displays 24 ROWS by 8Ø COLUMNS. This program will print ST$ at RO,CO (ROW,COLUMN). Type **RUN <ENTER>** and enter the value of 53 for the CO question. The string entered for ST$ should be displayed as entered.

DATE: June 5, 1984

REVISION DATE: June 5, 1984

BULLETIN NO.: I/O:67

PRODUCT: 26-1212 Network III Controller

SUBASSEMBLY: Main Logic Board

PURPOSE: To correct improper installation of resistor packs on controller PCB.

DISCUSSION:

During manufacture, resistor packs RP1, RP2, RP3, RP4, and RP5 may have been installed backwards. With the resistor packs installed backwards, the 75189 quad line receiver inputs are not tied to a pullup voltage. This will cause intermittent operation or complete lockup.

PROCEDURE:

Remove the cover of the Network III. Locate resistor packs RP1-RP5 next to U1. If the resistor packs are in backwards, remove them and place them correctly. A dot, bar, or circular indentation at one end of the package denotes pin 1. Make sure this lines up with the 1 on the silkscreen of the logic board. Check the values of the resistor packs. If they are not 10K ohm packages replace them with the correct ones. After replacing the resistor packs, verify proper operation.

Part Numbers for the needed resistor packs are:
Catalog Number 26-1212 - Part Number ARX-0137.

DATE: June 5, 1984

REVISION DATE: June 5, 1984

BULLETIN NO.: I/O:68

PRODUCT: 26-1158 DWII

SUBASSEMBLY: 26-126Ø Envelope Feeder

PURPOSE: To help eliminate envelope skewing when envelopes are fed through the envelope feeder's paper deflector rollers.

DISCUSSION/PROCEDURE: The original deflector plate installed into the DWII Envelope Feeder has two rollers attached to it which are very hard to align properly and even harder to keep in alignment over a period of time. National Parts has a new deflector plate in stock which should help correct this problem. The rollers are spring loaded to help insure proper envelope clearance without excessive amount of "forming" as with the old style deflector plate. This new deflector can be ordered through National Parts using part number ART-4819 and catalog number 26-126Ø.

DATE: June 19, 1984

REVISION DATE: June 19, 1984

BULLETIN NO.: I/O:69

PRODUCT: 26-1251 DMP4ØØ

SUBASSEMBLY: Tractor Feed Assembly

PURPOSE: To correct paper skew problems

DISCUSSION:

If paper is fed incorrectly or if the tractor assembly is not formed correctly, the paper can skew when moving through the tractor.

Specifications require no more than .4mm skew. This is one Dot Row, not one character row.

PROCEDURE:

1. When feeding paper from the back side of the printer, the paper release lever must be in the "A" position, the paper bail must be forward away from the paper, and the top cover must be off. All three of these conditions must be met or the paper will skew.

2. When feeding paper from the bottom of the printer, the paper release lever must be in the "A" position, and the paper bail must be forward away from the paper or skewing will occur. In this configuration the top cover may be on.

3. If the tractor assembly is malformed, check for any play in the assembly by removing the tractor and checking that all screws are tight. If this does not correct the problem, the replacement of either the right of left tractor feed assembly may be necessary.

Right	Tractor Assembly	Left	Tractor Assembly
AHC1988	SPROCKET RUBBER	AHC1988	SPROCKET RUBBER
ART7456	RIGHT TRACTOR	ART7455	LEFT TRACTOR
ART4311	CAM	ART4311	CAM
ART7459	SPROCKET	ART7459	SPROCKET

DATE: June 27, 1984

REVISION DATE: June 27, 1984

BULLETIN NO.: I/O:7Ø

PRODUCT: 26-1272 LMP-215Ø Dot Matrix

SUBASSEMBLY: Mechanism Driver Board and Main Logic Board

PURPOSE: Modification and Fix Kit for Top-of-Form and Line feed problems.

DISCUSSION:

Due to design, when the SET TOP OF FORM procedure in the Operators Manual is followed, the paper drive section is re-initialized to a "Half step operation". All subsequent stopping will be on the Half Step which is a failure-prone position. In Half Step position the current through the windings of the paper feed Motor is greater due to both windings being energized.

The 1N4ØØ4 diode used as protection of the paper feed drive section may fail "shorted" with no noticeable change in printer performance. The heat will likely discolor the PCB under the diode. Secondary failure of associated transistors at a later time is probably due to internal protection diode characteristics.

The diodes may fail "open" and the paper drive capability will be inoperative. The heat will likely discolor the PCB under the diode. No secondary failures are expected.

The design problem has been corrected in the form of a new ROM, identified by the Code 117Ø8Ø ØØ3
8D29 5-8-84
This ROM is located at position (15C) on the Parallel Control Board.

PROCEDURE:

1. Check the printer for an "M" stenciled near the catalog number. (This "M" indicates that the New ROM has been installed). This is not the "M" in the serial #. Verify with the Number printed above. If the numbers do not match, replace the ROM.

2. If a line feed problem or a Top-of-form problem exists, check the Mechanism Driver Board for discoloration under diodes CR15, CR2Ø, CR26, and CR3Ø. If discoloration is present, Replace the board.

3. If a line feed problem or a Top-of-form problem exists, and there is no discoloration, first check for an "open" diode CR15, CR2Ø, CR26, or CR3Ø.

4. If one of the above diodes are bad also check the Two (2) transistors associated with it, and replace components as necessary. As these are push-pull amplifiers, replace both transistors if one is bad.

5. Caution should be taken at all times to insure the transistors are not installed incorrectly (ie. a TIP121 for a TIP127). If this happens severe damage will result.

6. The following part numbers are for your reference.

1N4ØØ4	Diode	DX-Ø2Ø8	26-1272
TIP121	Transistor	MX-6172	26-1272
TIP127	Transistor	MX-6182	26-1272
PROM IC	ROM	MX-6351	26-1272
PCB	Mechanism Driver	AX-9461	26-1272

DATE: July 30, 1984

REVISION DATE: July 30, 1984

BULLETIN NO.: I/O:71

PRODUCT: 26-1922 Orchestra90

SUBASSEMBLY: AX-9474 Main PCB

PURPOSE: To eliminate distortion when using on a Model 4 with a Model 3 Hi-Res graphics option installed.

DISCUSSION: The power for the CMOS IC's on the Orchestra90 PCB is supplied by a filter capacitor on the reset line. This setup normally exhibits no problems as these IC's draw very little current, but it has been found that in using this setup on a Model 4 with a Model 3 Hi-Res Graphics PCB (26-1125) installed that the load on this line may be to great and distorted sound may result.

PROCEDURE:

(1) On the component side of the board, cut the trace going to pin 37 of the 40 pin connector.
(2) On the solder side of the board, solder a 510 ohm 1/4 watt resitor from pin 39 of the connector to pin 14 of U2.
(3) Test the machine for proper operation.

510 Ohm 1/4W 5% Part# N-0173EEC Catalog# 26-9999R

DATE: August 3, 1984

REVISION DATE: August 3, 1984

BULLETIN NO.: I/O:72

PRODUCT: Modem II 26-1173

SUBASSEMBLY: Main PCB

PURPOSE: Modem will not work properly in manual originate, but does work in auto originate.

DISCUSSION: Some Modem II's have been found to not work properly in the manual originate mode. This relates to the type of comparator used at U6. LM-393N's seem to work in this position, but LM-393P's will not. National Parts stocks only LM-393N chips so ordering a direct replacement will get the proper type IC. LM-393P IC's appear to have problems with doing a zero-crossing comparison on the CD signal.

PROCEDURE: If you are having the above stated problems replace U6 with an AMX-4376, Stock # 26-1173.

DATE: August 3, 1984

REVISION DATE: March 7, 1985

BULLETIN NO.: I/O:73

PRODUCT: 26-1198 DT1ØØ Terminal Interface

SUBASSEMBLY: N/A

PURPOSE: Service information.

SYSTEM DESCRIPTION

The Tandy DT1ØØ Terminal Interface is a serial to parallel converter for interfacing the Tandy DT1ØØ terminal to a "Centronics" style parallel printer.

The Terminal Interface utilizes the AY-3-1Ø15D UAR/T, in the receive mode, attached to the DT1ØØ auxiliary serial port to convert the serial data to parallel. A 74LS123 retriggerable multivibrator is used to provide the data strobe for the printer and to interface the BUSY signal.

THEORY OF OPERATION

Refer to the schematic on page 6 for the following discussion.

SERIAL TO PARALLEL CONVERSION

Serial to parallel conversion is accomplished using a General Instruments AY-3-1Ø15D UAR/T (IC1). The UAR/T is configured for 96ØØ Baud, 8 Data bits, 1 Stop bit, and no Parity. A logic "1" at pin 37 (Number of Bits 2) and pin 38 (Number of Bits 1) of IC1 selects the 8 bit data mode and a logic "1" at pin 39 (Even Parity Select) selects the no parity mode. The UAR/T has all it's input pins internally pulled up to Vcc. This allows the selection of 8 Data bits and no Parity to be done simply by making no connection to their pins. A logic "Ø" at pin 36 (number of Stop Bits) of IC1 selects the 1 stop bit mode.

PRINTER INTERFACE

The UAR/T is only capable of driving one TTL load. Therefore the Data lines to the printer are buffered through a 74LS373 Transparent Latch (IC2). The latch function is disabled by connecting pin 11 (Latch Enable) of IC2 to +5 volts and connecting pin 1 (Output Enable*) of IC2 to ground.

The printer strobe is produced from pin 19 (Data Available) of IC1. This signal goes to a logic "1" when a character has been received. This triggers a 74LS123 one shot (IC3A). Controlled by R1 and C4 IC3A produces a 4 mS pulse width for the printer strobe. The strobe signal is also applied to pin 18 (Reset Data Available*) of IC1 which resets pin 19 on the falling edge of the strobe.

The BUSY signal from the printer is pulled up by a 10K ohm resistor (R5) and connected to pin 9 of IC3A to inhibit the strobe signal while the printer is busy. The signal is then fed through a 10K ohm (R4) current limiting resistor and inverted by IC4F (4069) to be used by the DTR signal interface with the DT100 Terminal.

DT100 TERMINAL INTERFACE

The serial data from the DT100 Terminal is passed through a 10K ohm current limiting resistor (R2) and then rectified by D3 (1N914). It is then applied to the base of an NPN transistor (Q1) with the output (collector) attached to pin 20 (Serial data Input) of the UAR/T (IC1).

The serial data input signal is also applied to the trigger of the one shot IC3B pin 1. With R3 and C5 determining the time constant, a 2 mS pulse is output from IC3B at pin 4. This signal is then ANDed with the inverted BUSY signal by D4 and D5 (1N914). It is then applied to the inverting driver consisting of Q2, Q3, R9, R10, R11, D6 and D7 becoming the DTR signal connected to the DT100 Terminal through pin 20 of the DB-25 connector. This DTR signal prevents the terminal from sending more than one character after the DTR falls.

BAUD RATE CLOCK

The baud rate timing is provided by an RC oscillator formed by IC4A, IC4B and IC4C in conjunction with R6, R7, R8, C7 and POT1. It is then buffered by IC4D and IC4E before being applied to pin 17 (Receiver Clock) of the UAR/T (IC1).

POWER SUPPLY

AC power (approximately 8v RMS) is provided by a Plug In Power Adaptor. This 8v AC is half wave rectified by D1 and D2 and then filtered by C1 and C2 to provide plus and minus 12v DC. The +12v is then further regulated by a 78Ø5 5v regulator and the final filtering is done by C3. This provides the +5v DC for the unit.

ADJUSTMENTS

The only adjustment required is the receiving baud rate clock. This can be adjusted by attaching a frequency counter to pin 4 of IC4 (4Ø69) and turning POT1 to obtain 153.6Ø KHz.

CENTRONICS CONNECTOR:

PIN NO.	DESCRIPTION
1	STROBE*
2	DATA Ø
3	DATA 1
4	DATA 2
5	DATA 3
6	DATA 4
7	DATA 5
8	DATA 6
9	DATA 7
1Ø	N/C
11	BUSY
12-18	N/C
19-3Ø	GROUND
31-36	N/C

DB-25 CONNECTOR:

PIN NO.	DESCRIPTION
1	N/C
2	N/C
3	RECEIVE DATA
4-6	N/C
7	GROUND
8-19	N/C
2Ø	DTR*
21-25	N/C

DT1ØØ TERMINAL INTERFACE
PARTS LIST

SYMBOL	DESCRIPTION	R/S PART NO.
C1	47Ø uf, 16v electrolitic	CC477JDAP
C2	47 uf, 16v electrolitic	CC476JDAP
C3	Ø.2 uf ceramic	CC2Ø4KJCP
C4	Ø.ØØ1 uf cermic	CC1Ø2KRCP
C5	Ø.2 uf cermic	CC2Ø4KJCP
C6	Deleted	
C7	47Ø pf 1% mica	CC1Ø1FJWP
R1, R2	1ØK ohm 1/4 watt 5% resistor	NØ281EEC
R3	47K ohm 1/4 watt 5% resistor	NØ34ØEEC
R4, R5	1ØK ohm 1/4 watt 5% resistor	NØ281EEC
R6	1K ohm 1/4 watt 5% resistor	NØ196EEC
R7	27Ø ohm 1/4 watt 5% resistor	NØ155EEC
R8	4.99K ohm 1/4 watt 1% resistor	NØ6ØØBEE
R9, R1Ø	1ØK ohm 1/4 watt 5% resistor	NØ281EEC
R11	1K ohm 1/4 watt 5% resistor	NØ196EEC
R12	2ØK ohm 1/4 watt 5% resistor	NØ3Ø6EEC
POT1	1K ohm potentiometer	AP-7431
IC1	AY-3-1Ø15D UAR/T	MX-6566
IC2	74LS373 Octal Trans. Latch	AMX-5174
IC3	74LS123 Dual Retriggerable Multivibrator	MX-4851
IC4	4Ø69 (or 74CØ4) Hex Inverter	MX-5479
Regulator	78Ø5 5v Regulator	MX-6567
Q1, Q2	2N2222	AMX-3678
Q3	2N39Ø6	AMX-3584
D1	1N914 Diode (1N4148)	DXØØ1Ø
D2	1N4ØØ1 Diode	DXØØ7
D3-D7	1N914 Diode (1N4148)	DXØØ1Ø
MISC	Connector, DB25, PC Mount, Female	AJ-7676
	Connector, 36 pin, Centronics, Male	AW-3284
	Connector, 4Ø pin, PCB mount	AW-3285
	Cable, Ribbon, 36 Conductor	AW-3286

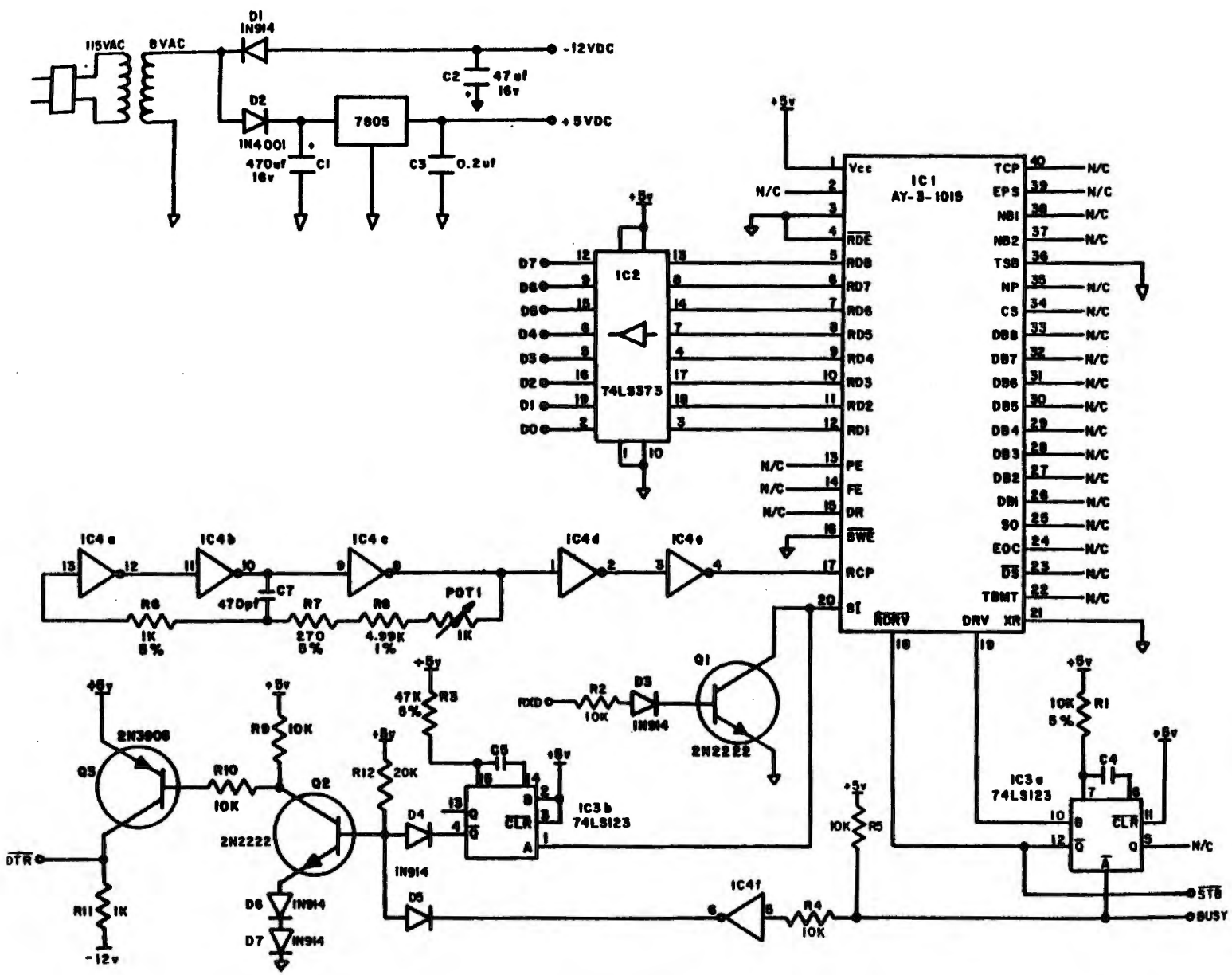
115VAC
8VAC
D1 1N914
D2 1N4001
470uf 16v
C1
7805
C2 47uf 16v
C3 0.2uf
-12VDC
+5VDC
IC1 AY-3-1015
IC2 74LS373
IC3a 74LS123
IC3b 74LS123
IC4a
IC4b
IC4c
IC4d
IC4e
IC4f
R6 1K 5%
C7 470pf
R7 270 5%
R8 4.99K 1%
POT1 1K
R1 10K 5%
C4
R2 10K
D3 1N914
Q1 2N2222
RXD
R3 47K 5%
C5
R12 20K
D4 1N914
D5
R4 10K
R5 10K
R9 10K
R10 10K
Q2 2N2222
D6 1N914
D7 1N914
Q3 2N3906
R11 1K
-12v
DTR
STB
BUSY
N/C

AY-3-1015D UNIVERSAL ASYNCHRONOUS RECEIVER/TRANSMITTER

DESCRIPTION

The Universal Asynchronous Receiver/Transmitter (UAR/T) is an LSI subsystem which accepts binary characters from either a terminal device or a computer and receives/transmits this character with appended control and error detecting bits. All characters contain a start bit, 5 to 8 data bits, one or two stop bits (1½ stop bit capability) and either odd/even parity or no parity. In order to make the UAR/T universal, the baud, bits per word, parity mode, and the number of stop bits are externally selectable. All inputs and outputs are directly compatible with MTOS/MTNS logic, and also with TTL/DTL/CMOS logic without the need for interfacing components. All strobed outputs are three-state logic.

FEATURES:

- DTL and TTL compatible — no interfacing circuits required — drives one TTL load
- Fully Double Buffered — eliminates need for system -synchronization, facilitates high-speed operation
- Full Duplex Operation — can handle multiple bauds (receiving-transmitting) simultaneously
- High Speed Operation
- Three-State Outputs — bus structure capability
- Low Power — minimum power requirements
- Input Protected — eliminates handling problems
- Single Supply Operation
- External reset of all registers except control bits register
- 0 to 30K baud
- Pull-up resistors to V_{CC} on all inputs

ELECTRICAL CHARACTERISTICS

Maximum Ratings*

V_{CC} (with respect to GND) . . . . . −0.3 to +16 V
Storage Temperature . . . . . −65°C to +150°C
Operating Temperature. . . . . 0°C to +70°C

*Exceeding these ratings could cause permanent damage. Functional operation of these devices at these conditions is not implied — operating ranges are specified below.

BLOCK DIAGRAM

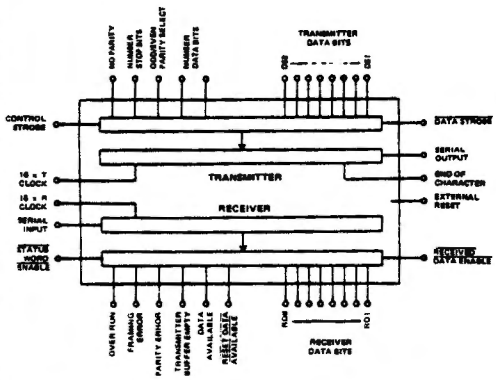

Figure 1

PIN CONFIGURATION
40 LEAD DUAL IN LINE

Top View

* Pin 2: No Connection.

PIN FUNCTIONS

PIN	NAME (SYMBOL)	FUNCTION
1	V_{CC} Power Supply (V_{CC})	+5V Supply
2		Not connected
3	Ground (V_{GI})	Ground
4	Received Data Enable (RDE)	A logic "0" on the receiver enable line places the received onto the output lines.
5-12	Received Data Bits (RD8-RD1)	These are the 8 data output lines. Received characters are right justified: the LSB always appears on RD1. These lines have tristate outputs, i.e., they have the normal TTL output characterisitics when RDE is "0" and a high impedance state when RDE is "1". Thus, the data output lines can be bus structure oriented.
13	Parity Error (PE)	This line goes to a logic "1" if the received character parity does not agree with the selected parity. Tri-state.
14	Framing Error (FE)	This line goes to a logic "1" if the received character has no valid stop bit. Tri-state.
15	Over-Run (OR)	This line goes to a logic "1" if the previously received character is not read (DAV line not reset) before the present character is transferred to the receiver holding register. Tri-state.
16	Status Word Enable (SWE)	A logic "0" on this line places the status word bits (PE, FE, OR, DAV, TBMT) onto the output lines. Tri-state.
17	Receiver Clock (RCP)	This line will contain a clock whose frequency is 16 times (16X) the desired receiver baud.
18	Reset Data Available (RDAV)	A logic "0" will reset the DAV line. The DAV F/F is only thing that is reset.
19	Data Available (DAV)	This line goes to a logic "1" when an entire character has been received and transferred to the receiver holding register. Tristate-Fig. 16.
20	Serial Input (SI)	This line accepts the serial bit input stream. A Marking (logic "1") to spacing (logic "0") transition is required for initiation of data reception. Fig. 15,16.
21	External Reset (XR)	Resets all registers except the control bits register. Sets SO, EOC and TBMT to a logic "1". Resets DAV and error flags to "0". Clears input data buffer. Must be tied to logic "0" when not in use.
22	Transmitter Buffer Empty (TBMT)	The transmitter buffer emtpy flag goes to a logic "1" when the data bits holding register may be loaded with another character. Tri-state. See Fig. 9, 11.
23	Data Strobe (DS)	A strobe on this line will enter the data bits into the data bits holding register. Initial data transmission is initiated by the rising edge of DS. Data must be stable during entire strobe.
24	End of Character (EOC)	This line goes to a logic "1" each time a full character is transmitted. It remains at this level until the start of transmission of the next character. See Fig. 8, 10.
25	Serial Output (SO)	This line will serially, by bit, provide the entire transmitted character. It will remain at a logic "1" when no data is being transmitted.
26-33	Data Bit Inputs (DB1-DB8)	There are up to 8 data bit input lines available.
34	Control Strobe (CS)	A logic "1" on this lead will enter the control bits (EPS, NB1, NB2, TSB, NP) into the control bits holding register. This line can be strobed or hard wired to a logic "1" level. See Fig. 19.
35	No Parity (NP)	A logic "1" on this lead will eliminate the parity bit from the transmitted and received character (no PE indication). The stop bit(s) will immediately follow the last data bit. It not used, this lead must be tied to a logic "0".
36	Number of Stop Bits (TSB)	This lead will select the number of stop bits, 1 or 2, to be appended immediately after the partiy bit. A logic "0" will insert 1 stop bit and a logic "1" will insert 2 stop bits. The combined selection of 2 stop bits and 5 bits/character will produce 1½ stop bits.
37-38	Number of Bits/Character (NB2, NB1)	These two leads will be internally decoded to select either 5, 6, 7 or 8 data bits/character. NB2 NB1 Bits/Character 0 0 5 0 1 6 1 0 7 1 1 8
39	Odd/Even Parity Select (EPS)	The logic level on this pin selects the type of parity which will be appended immediately after the data bits. It also determines the parity that will be checked by the receiver. A logic "0" will insert odd parity and a logic "1" will insert even parity.
40	Transmitter Clock (TCP)	This line will contain a clock whose frequency is 16 times (16X) the desired transmitter baud.

TRANSMITTER OPERATION

Initializing

Power is applied, External Reset is enabled and Clock pulse is applied having a frequency of 16 times the desired Baud. The above conditions will set TBMT, EOC, and SO to logic "1" (line is marking).

After initializing is completed, user may set control bits and data bits, with control bits selection normally occurring before data bits selection. However, one may set both DS and CS simultaneously if minimum pulse width specifications are followed. Once Data Strobe (DS) is pulsed, the TBMT signal will change from a logic "1", indicating that the Data Bits Holding Register is filled with a previous character and is unable to receive new data bits, and Transmitter Shift Register is transmitting previously loaded data. TBMT will return to logic "1".

When Transmitter Shift Register is empty, data bits in the Holding Register are immediately loaded into the Transmitter Shift Register for transmission. The shifting of information from the Holding Register to the Transmitter Shift Register will be followed by SO and EOC going to a logic "0"; and TBMT will also go to a logic "1", indicating that the shifting operation is completed and that the Data Bits Holding Register is ready to accept new data. If should be remembered that one full character time is now available for loading of the next character without loss in transmission speed due to double buffering (seperate Data Bits Holding Register and Transmitter Shift Register).

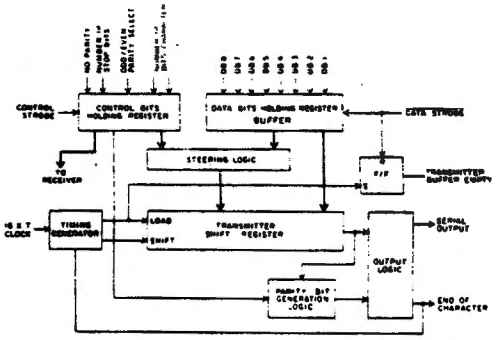

Fig. 2 TRANSMITTER BLOCK DIAGRAM

RECEIVER OPERATION

Initializing

Power is applied, External Reset is enabled, and Clock Pulse is applied having a frequency of 16 times the desired Baud. The previous conditions will set Data Available (DAV) to a logic "1".

After initializing is completed, user should note that one set of control bits will be used for both receiver and transmitter, making individual control bit setting unnecessary. Data reception starts when Serial Input signal changes from Marking (logic "1") to spacing (logic "0") which initiates start bit. The start bit is valid if, after transition from logic "1" to logic "0", the SI line continues to be at logic "0" (when center sampled) 8 clock pulses later. If, however, line is at a logic "1" when center sampling occurs, the start bit verification process will be reset. If the Serial Input line transitions from a logic "1" to a logic "0" (marking to spacing) when the 16x clock is in a logic "1" state, the bit time for center sampling will begin when the clock line transitions from a logic "1" to a logic "0" state. After verification of a genuine start bit, data bit reception, parity bit reception and stop bit(s), reception proceeds in an orderly manner.

While receiving parity and stop bit(s) the receiver will compare transmitted parity and stop bit(s) with control data bits (parity and number of stop bits) previously set and indicate an error by changing the parity error flip flop and/or the framing error flip flop to a logic "1". It should be noted that if the No Parity Mode is selected the PE (parity error) will be unconditionally set to a logic "0".

Once a full character is received, internal logic looks at the Data Available (DAV) signal to determine if data has been the read out. If the DAV signal is at a logic "1" the receiver will assume data has not been read out and the over run flip flop of the Status Word Holding Register will be set to a logic "1". If the DAV signal is at a logic "0" the receiver will assume that data has been read out. After DAV goes to a logic "1", the Receiver Shift Register is now ready to accept the next character and has one full character time to remove the received character.

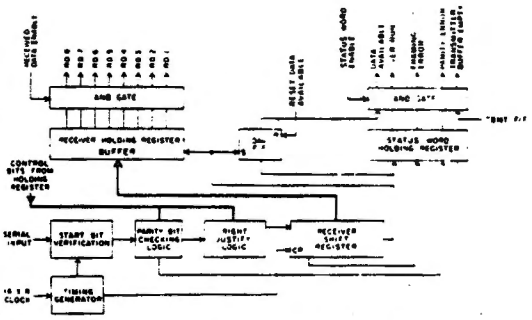

Fig. 3 RECEIVER BLOCK DIAGRAM

SPECIFICATIONS

Standard Conditions (unless otherwise noted)

V_{CC} = +4.75V to +5.25V

Operating Temperature (T) = 0°C to +70°C

Characteristics	Min	Typ**	Max	Units	Conditions
DC CHARACTERISTICS					
Input Logic Levels					
Logic 0	0	–	0.8	Volts	
Logic 1	2.4	–	V_{CC}+0.3	Volts	Has internal pull-up resistors to V_{CC}
Input Capacitance					
All inputs	–	–	20	pF	0 volts bias, f = 1MHz
Output Impedance					
Tri-State Outputs	1.0	–	–	MΩ	
Data Output Levels					
Logic 0	–	–	+0.4	Volts	I_{OL} = 1.6mA (sink)
Logic 1	2.4	–	–	Volts	I_{OH} = –40μA (source)–at V_{CC} = +5V
Output Capacitance	–	10	15	pF	
Short Ckt. Current	–	–	–	–	See Fig. 4.
Power Supply Current					
I_{CC} at V_{CC} = +5V	–	10	15	mA	
AC CHARACTERISTICS					T = 25°C, Output load capacitance 50 pF max.
Clock Frequency	DC	–	400	kHz	at V_{CC} = +4.75V/+14V
Baud	0	–	25	kbaud	at V_{CC} @ +4.75V/+14V
Pulse Width					
Clock Pulse	1.0	–	–	μS	See Fig. 14
Control Strobe	200		–	ns	See Fig. 19a
Data Strobe	200	–	–	ns	See. Fig. 18
External Reset	500	–	–	ns	See Fig. 17
Status Word Enable	500		–	ns	See Fig. 12
Reset Data Available	200	–	–	ns	See Fig. 13
Received Data Enable	500	–	–	ns	See Fig. 12
Set Up & Hold Time					
Input Data Bits	20	–	–	ns	See Fig. 18
Input Control Bits	20	–	–	ns	See. Fig. 19b
Output Propagation Delay					
TPD0	–	–	500	ns	See Fig. 12, 5
TPD1	–	–	500	ns	See Fig. 12, 5

**Typical values are at +25°C and nominal voltages.

TYPICAL CHARACTERISTIC CURVES

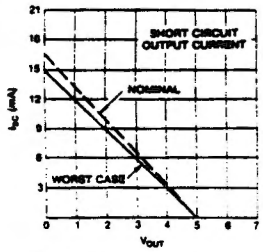

Fig. 4 SHORT CIRCUIT OUTPUT CURRENT (only 1 output may be shorted at a time)

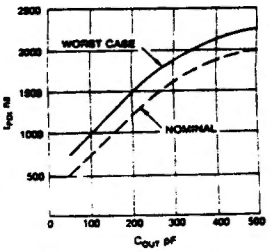

Fig. 5 RD1-RD8, PE, FE, OR, TBMT, DAV

APPLICATIONS

Note: The connection details of this device depend on the system you wish to interface with. Refer to standard reference books that are published by that particular system manufacturer.

COMPUTER INTERFACING

The strobing capability of the Universal Asynchronous Receiver/Transmitter unit (UAR/T) makes it ideal for interfacing the unit into any of the popular computer systems. Since there are control and data transfer instructions provided by the CPU, two separate strobes are provided. They are the control strobe line and the data strobe line.

A typical computer interface will provide a unique device address to select a given device for an operation. The UAR/T is assigned one of the available addresses. When the UAR/T is selected, it will respond to one of the Computer I/O commands. These include Read, Write, Device Word, Control and Interrupt.

Read Command
This command will read the contents of the received data into the computer.

Write Command:
The write command will load the contents of the computer data out lines into the transmitter buffer.

Device Status Word
This command will read the status of the received data, that is the parity, framing, overrun, and end of transmit into the computer.

Control Command
This command will modify the UAR/T to respond to odd/even parity, number of bits/character, number of stop bits, or no parity.

Interrupt
The UAR/T provides two interrupt conditions which are Transmitter Buffer Empty and Data Available.

TERMINAL INTERFACING

If a terminal manufacturer would like to have his terminal compatible with as many other terminals and central processing units as possible, he can utilize the variable format of the UAR/T to make this possible. By means of strapping options or P.C. switches he could select the number of data bits (6-level or 7-level ASCII, for example), the type of parity, etc. In this way, each user could have a customized interface, yet the terminal manufacturer would have a standard interfacing card between his parallel-operating terminal and his asynchronous, serial operating modem.

Since the UAR/T is universally programmable through the five control pins and the control enable input, it can be used to interface with a wide variety of terminals, including Radio Shack's Models I, II and III.

TIMING DIAGRAMS

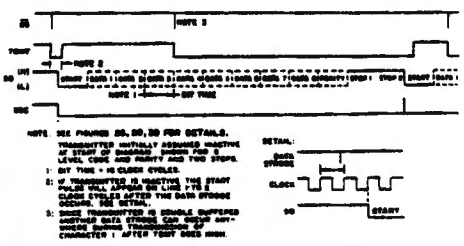

Fig. 6 UAR/T – TRANSMITTER TIMING

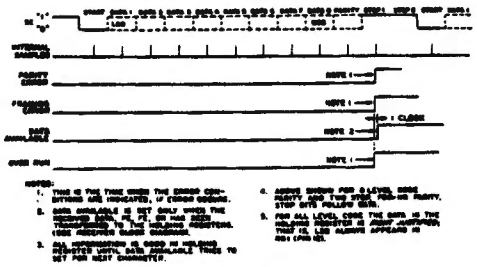

Fig. 7 UAR/T – RECEIVER TIMING

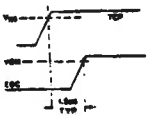

Fig. 8 EOC TURN-ON

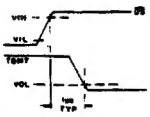

Fig. 9 TBMT TURN-OFF

Fig. 10 EOC TURN-OFF

SN54LS122/SN74LS122 • SN54LS123/SN74LS123

RETRIGGERABLE MONOSTABLE MULTIVIBRATORS

DESCRIPTION — These d-c triggered multivibrators feature pulse width control by three methods. The basic pulse width is programmed by selection of external resistance and capacitance values. The LS122 has an internal timing resistor that allows the circuits to be used with only an external capacitor. Once triggered, the basic pulse width may be extended by retriggering the gated low-level-active (A) or high-level-active (B) inputs, or be reduced by use of the overriding clear.

The LS122 and LS123 have Schmitt trigger inputs to ensure jitter-free triggering from the B input with transition rates as slow as 0.1 millivolt per nanosecond.

- **OVERRIDING CLEAR TERMINATES OUTPUT PULSE**
- **COMPENSATED FOR V_{CC} AND TEMPERATURE VARIATIONS**
- **D-C TRIGGERED FROM ACTIVE-HIGH OR ACTIVE-LOW GATED LOGIC INPUTS**
- **RETRIGGERABLE FOR VERY LONG OUTPUT PULSES, UP TO 100% DUTY CYCLE**
- **INTERNAL TIMING RESISTORS ON LS122**

SN54LS122, SN74LS122
(TOP VIEW) (SEE NOTES 1 THRU 4)

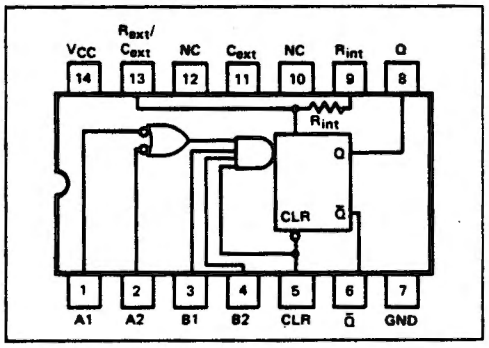

NC - No internal connection.

SN54LS123, SN74LS123
(TOP VIEW) (SEE NOTES 1 THRU 4)

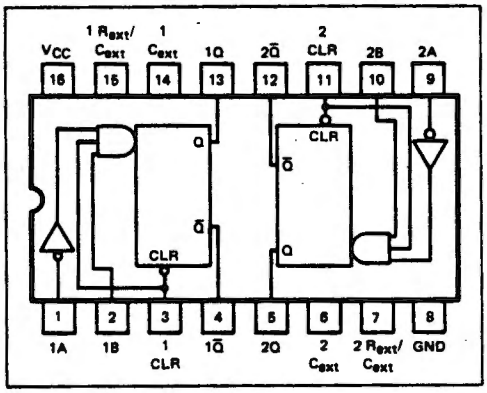

LS122
FUNCTIONAL TABLE

INPUTS					OUTPUTS	
CLEAR	A1	A2	B1	B2	Q	Q̄
L	X	X	X	X	L	H
X	H	H	X	X	L	H
X	X	X	L	X	L	H
X	X	X	X	L	L	H
H	L	X	↑	H	⎍	⊔
H	L	X	H	↑	⎍	⊔
H	X	L	↑	H	⎍	⊔
H	X	L	H	↑	⎍	⊔
H	H	↓	H	H	⎍	⊔
H	↓	↓	H	H	⎍	⊔
H	↓	H	H	H	⎍	⊔
↑	L	X	H	H	⎍	⊔
↑	X	L	H	H	⎍	⊔

LS123
FUNCTIONAL TABLE

INPUTS			OUTPUTS	
CLEAR	A	B	Q	Q̄
L	X	X	L	H
X	H	X	L	H
X	X	L	L	H
H	L	↑	⎍	⊔
H	↓	H	⎍	⊔
↑	L	H	⎍	⊔

NOTES:
1. An external timing capacitor may be connected between C_{ext} and R_{ext}/C_{ext} (positive).
2. To use the internal timing resistor of the LS122, connect R_{int} to V_{CC}.
3. For improved pulse width accuracy connect an external resistor between R_{ext}/C_{ext} and V_{CC} with R_{int} open-circuited.
4. To obtain variable pulse widths, connect an external variable resistance between R_{int}/C_{ext} and V_{CC}.

SN54LS373/SN74LS373
OCTAL TRANSPARENT LATCH WITH 3-STATE OUTPUTS

DESCRIPTION — The 54LS/74LS373 consists of eight latches with 3-state outputs for bus organized system applications. The flip-flops appear transparent to the data (data changes asynchronously) when Latch Enable (LE) is HIGH. When LE is LOW, the data that meets the set-up times is latched. Data appears on the bus when the Output Enable ($\overline{OE}$) is LOW. When $\overline{OE}$ is HIGH the bus output is in the high impedence state.

- **EIGHT LATCHES IN A SINGLE PACKAGE**
- **3-STATE OUTPUTS FOR BUS INTERFACING**
- **HYSTERESIS ON LATCH ENABLE**
- **INPUT CLAMP DIODES LIMIT HIGH SPEED TERMINATION EFFECTS**
- **FULLY CMOS AND TTL COMPATABLE**

LOGIC SYMBOL

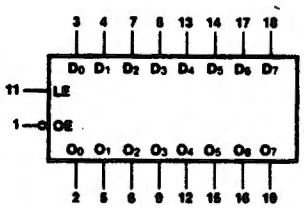

V_{CC} = Pin 20
GND = Pin10

CONNECTION DIAGRAM DIP (TOP VIEW)

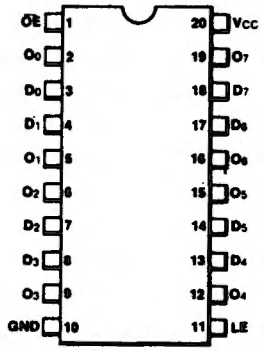

PIN NAMES

		LOADING (Note a) HIGH	LOW
D_0 - D_7	Data Inputs	0.5 U.L.	0.25 U.L.
LE	Latch Enable (Active HIGH) input	0.5 U.L.	0.25 U.L.
$\overline{OE}$	Output Enable (Active LOW) input	0.5 U.L.	0.25 U.L.
O_0 - O_7	Outputs (Note b)	65 (25) U.L.	15 (7.5) U.L.

NOTES:
a) 1 TTL Unit Load (U.L.) = 40 μA HIGH/1.6 mA LOW

b) The Output LOW drive factor is 7.5 U.L. for Military and 25 U.L. for Commercial (74) Temperature Ranges. The Output HIGH drive factor is 25 U.L. for Military (54) and 65 U.L. for Commercial (74) Temperature Ranges.

LOGIC DIAGRAM

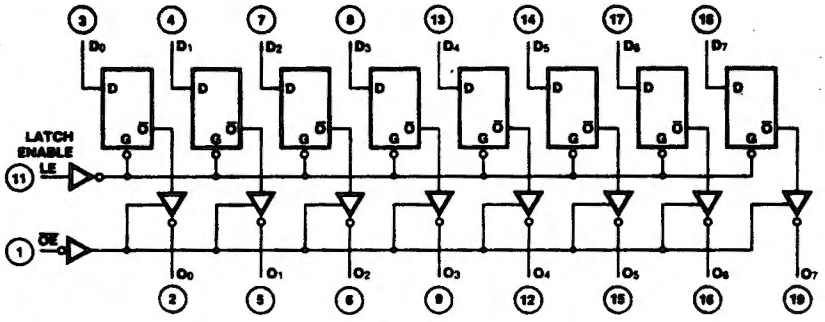

V_{CC} = Pin 20
GND = Pin 10
O= Pin Numbers

SN54LS373/SN74LS373

GUARANTEED OPERATING RANGES

PART NUMBERS	SUPPLY VOLTAGE (V_{CC})			TEMPERATURE
	MIN	TYP	MAX	
SN54LS373X	4.5 V	5.0 V	5.5 V	−55°C to +125°C
SN74LS373X	4.75 V	5.0 V	5.25 V	0°C to +70°C

X = package type; W for Flatpak, J for Ceramic Dip, N for Plastic Dip. See Packaging Information Section for packages available on this product.

DC CHARACTERISTICS OVER OPERATING TEMPERATURE RANGES (unless otherwise specified)

SYMBOL	PARAMETER		LIMITS MIN	LIMITS TYP	LIMITS MAX	UNITS	TEST CONDITIONS	
V_{IH}	Input HIGH Voltage		2.0			V	Guaranteed Input HIGH Voltage for All Inputs	
V_{IL}	Input LOW Voltage	54			0.7	V	Guaranteed Input LOW Voltage for All Inputs	
		74			0.8			
V_{CD}	Input Clamp Diode Voltage			−0.65	−1.5	V	V_{CC} = MIN, I_{IN} = −18 mA	
V_{OH}	Output HIGH Voltage	54	2.4	3.4		V	I_{OH} = −1.0 mA	V_{CC} = MIN, V_{IN} = V_{IH} or V_{IL} per Truth Table
		74	2.4	3.1			I_{OH} = −2.6 mA	
V_{OL}	Output LOW Voltage	54, 74		0.25	0.4	V	I_{OL} = 12 mA	V_{CC} = MIN, V_{IN} = V_{IH} or V_{IL} per Truth Table
		74		0.35	0.5		I_{OL} = 24 mA	
I_{OZH}	Output Off Current HIGH				20	μA	V_{CC} = MAX, V_{OUT} = 2.4 V, V_E = 2.0 V	
I_{OZL}	Output Off Current LOW				−20	μA	V_{CC} = MAX, V_{OUT} = 0.4 V, V_E = 2.0 V	
I_{IH}	Input HIGH Current				20	μA	V_{CC} = MAX, V_{IN} = 2.7 V	
	Input HIGH Current at MAX Input Voltage				0.1	mA	V_{CC} = MAX, V_{IN} = 7.0 V	
I_{IL}	Input LOW Current				−0.4	mA	V_{CC} = MAX, V_{IN} = 0.4 V	
I_{OS}	Output Short Circuit Current (Note 4)		−30		−130	mA	V_{CC} = MAX, V_{OUT} = 0 V	
I_{CC}	Power Supply Current, Outputs OFF			24	40	mA	V_{CC} = MAX, V_{IN} = 0 V, V_E = 4.5 V	

NOTES:
1. Conditions for testing, not shown in the Table, are chosen to guarantee operations under "worst case" conditions.
2. The specified LIMITS represent the "worst case" value for the parameter. Since these "worst case" values normally occur at the temperature and supply voltage extremes, additional noise immunity and guard banding can be achieved by decreasing the allowable system operating ranges.
3. Typical limits are at V_{CC} = 5.0 V, 25°C, and maximum loading.
4. Not more than one output should be shorted at a time.

AC SET-UP REQUIREMENTS: T_A = 25°C

SYMBOL	PARAMETER	LIMITS MIN	LIMITS TYP	LIMITS MAX	UNITS	TEST CONDITIONS	
t_sD	Set-up Time Data to Negative Going LE	0	−2.0		ns	Fig. 1	
t_hD	Hold Time Data to Negative Going LE	10	7.0		ns	Fig. 1	V_{CC} = 5.0 V
t_wLE	Minimum LE Pulse Width HIGH or LOW	15	10		ns	Fig. 1	

DEFINITION OF TERMS:

SET-UP TIME (t_s) – is defined as the minimum time required for the correct logic level to be present at the logic input prior to LE transition from HIGH-to-LOW in order to be recognized and transferred to the outputs.

HOLD TIME (t_h) – is defined as the minimum time following the LE transition from HIGH-to-LOW that the logic level must be maintained at the input in order to ensure continued recognition.

SN54LS373/SN74LS373

AC CHARACTERISTICS : $T_A = 25°C$, $V_{CC} = 5.0$ V

SYMBOL	PARAMETER	LIMITS MIN	LIMITS TYP	LIMITS MAX	UNITS	TEST CONDITIONS	
t_{PLH} t_{PHL}	Propagation Delay, Data to Output		10 16	18 18	ns	Fig. 1	C_L = 45 pF
t_{PLH} t_{PHL}	Propagation Delay, LE to Output		14 24	30 30	ns	Fig. 1	C_L = 45 pF
t_{PZH}	Output Enable Time to HIGH Level		15	28	ns	Figs. 3, 4	C_L = 15 pF
t_{PZL}	Output Enable Time to LOW Level		22	36	ns	Figs. 2, 4	R_L = 667Ω
t_{PLZ}	Output Disable Time from LOW Level		13	25	ns	Figs. 2, 4	C_L = 5.0 pF
t_{PHZ}	Output Disable Time from HIGH Level		11	20	ns	Figs. 3, 4	R_L = 667Ω

AC WAVEFORMS

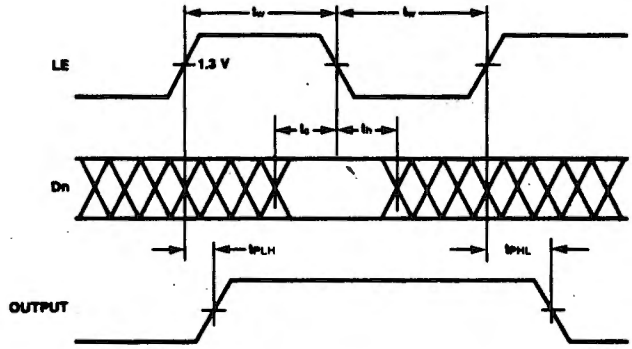

Fig. 1

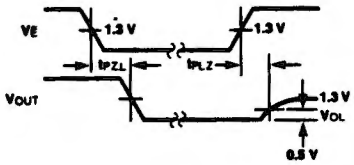

Fig. 2

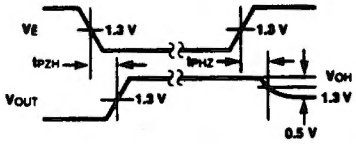

Fig. 3

AC LOAD CIRCUIT

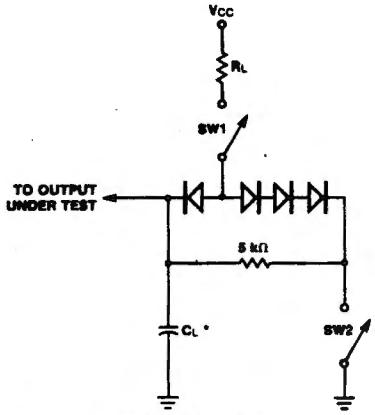

*Includes Jip and Probe Capacitance.

SWITCH POSITIONS

SYMBOL	SW1	SW2
t_{PZH}	Open	Closed
t_{PZL}	Closed	Open
t_{PLZ}	Closed	Closed
t_{PHZ}	Closed	Closed

Fig. 4

4069UB/74C04/54C04

HEX INVERTER

DESCRIPTION — The 4069UB is a general purpose Hex Inverter which has standard Fairchild input and output characteristics. A single-stage design has been used since the output impedance of a single-input gate is not pattern sensitive. The 4096UB is a Direct Replacement for the 74C04/54C04.

LOGIC AND CONNECTION DIAGRAM
DIP (TOP VIEW)

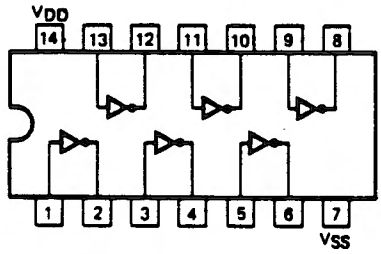

NOTE:
The Flatpak version has the same pinouts (Connection Diagram) as the Dual In-line Package.

DC CHARACTERISTICS: V_{DD} as shown, V_{SS} = 0 V (See Note 1)

SYMBOL	PARAMETER		LIMITS									UNITS	TEMP	TEST CONDITIONS
			V_{DD} = 5 V			V_{DD} = 10 V			V_{DD} = 15 V					
			MIN	TYP	MAX	MIN	TYP	MAX	MIN	TYP	MAX			
I_{DD}	Quiescent Power Supply Current	XC			1			2			4	μA	MIN, 25°C	All inputs at 0 V or V_{DD}
					7.5			15			30		MAX	
		XM			0.25			0.5			1	μA	MIN, 25°C	
					7.5			15			30		MAX	

AC CHARACTERISTICS AND SET-UP REQUIREMENTS: V_{DD} as shown, V_{SS} = 0 V, T_A = 25°C (See Note 2)

SYMBOL	PARAMETER	LIMITS									UNITS	TEST CONDITIONS
		V_{DD} = 5 V			V_{DD} = 10 V			V_{DD} = 15 V				
		MIN	TYP	MAX	MIN	TYP	MAX	MIN	TYP	MAX		
t_{PLH}	Propagation Delay		32	64		16	32		13	26	ns	C_L = 50 pF, R_L = 200 kΩ
t_{PHL}			32	64		16	32		13	26		
t_{TLH}	Output Transition Time		45	135		23	70		18	45	ns	Input Transition Times < 20 ns
t_{THL}			45	135		23	70		18	45		

NOTES:
1. Additional DC Characteristics are listed in this section under 4000B Series CMOS Family Characteristics.
2. Propagation Delays and Output Transition Times are graphically described in this section under 4000B Series CMOS Family Characteristics.

FAIRCHILD CMOS • 4069UB/74C04/54C04

TYPICAL ELECTRICAL CHARACTERISTICS

TYPICAL POWER DISSIPATION VERSUS FREQUENCY

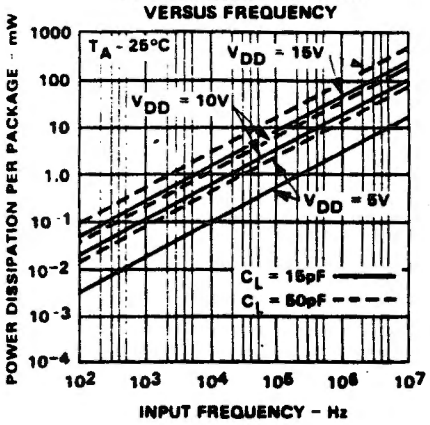

PROPAGATION DELAY VERSUS TEMPERATURE

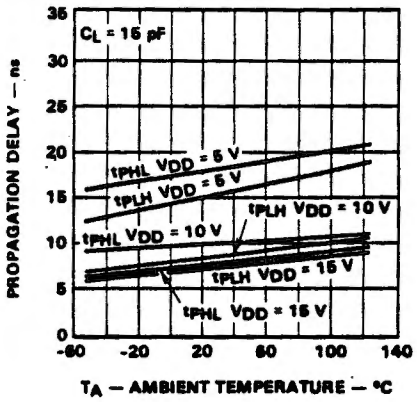

PROPAGATION DELAY VERSUS LOAD CAPACITANCE

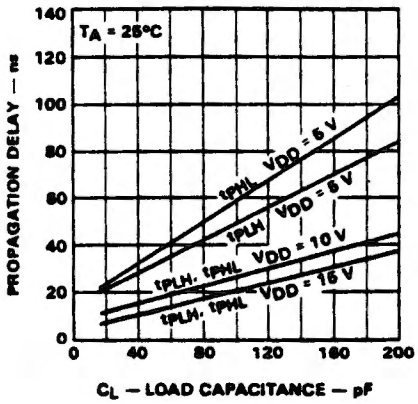

OUTPUT TRANSITION TIME VERSUS LOAD CAPACITANCE

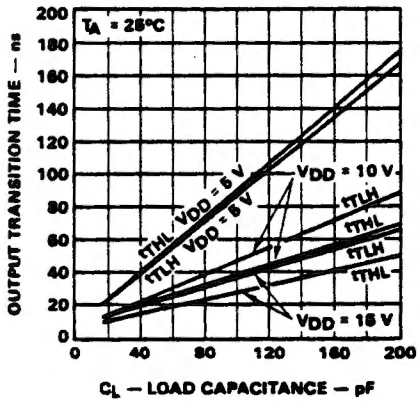

TYPICAL VOLTAGE TRANSFER CHARACTERISTICS

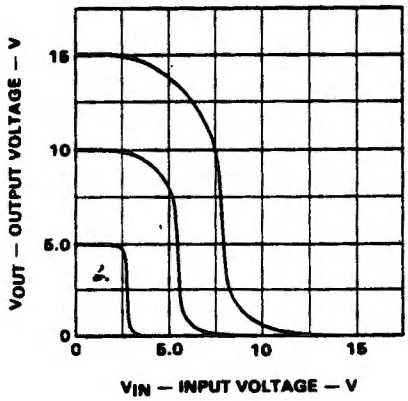

DATE: September 6, 1984

REVISION DATE: September 6, 1984

BULLETIN NO.: I/O:74

PRODUCT: All units with floppy drives.

PURPOSE: Reduce or eliminate soft errors on floppy drives.

COMPLIANCE WITH THIS BULLETIN IS MANDATORY ON ALL UNITS IN FOR SERVICE OR P.M.

DISCUSSION: Residual magnetism in a floppy drive read/write head can dramatically effect the performance of a drive. In testing a drive with a magnetized head, the head amplitude during a read of a pre-recorded signal is normal. However the head amplitude of a signal written by that same drive is significantly lower.

The following lists some possible causes of residual magnetism.

1.) Disconnecting the drive power line with power left on.
2.) Disconnecting ribbon cable with power left on.
3.) Shorting write line during write operations.
4.) Touching the head connector or exposed pins with anything during a write operation.
5.) Transient power line peaks during write operations.

PROCEDURE: Demagnetize read/write heads using Tape Head Demagnetizer, RADIO SHACK stock number 44-207. Follow the instructions included with the demagnetizer.

NOTE: removal of the head is not required for this procedure.

DATE: September 10, 1984

REVISION DATE: August 27, 1985

BULLETIN NO.: I/O:75

PRODUCT: 26-1272 LMP-2150 Line Matrix Printer

SUBASSEMBLY: AX-9465 Parallel Control Board

PURPOSE: To correct a Top-of-Form timing problem.

DISCUSSION:

It has been determined that a problem in the Master Control Unit (EPROM) has a serious timing problem for top-of-form commands. The version MCU 40.12 does not allow proper amount of time to complete the top-of-form command in some cases before reverting to single line feed mode. This is noticeable if there are only a couple of lines of printing on the page before the top-of-form command is executed. However if the page is over half full of printed lines then there is enough time allowed by the MCU to complete the top-of-form. This timing problem can cause failure to complete top-of-form and also damage to the Mechanism Driver Board as outlined in TB I/O:70. The modified EPROM MCU 40.12A corrects this problem.

PROCEDURE:

Replace the EPROM located in position 3C with the new version MCU 40.12A National Parts number MX-6881 listed under Cat.# 26-1272.

6.77

OBSELETE

DATE: September 17, 1984

REVISION DATE: September 17, 1984

BULLETIN NO.: I/O:76

PRODUCT: 26-6052 DT-100

SUBASSEMBLY: Main Logic PCB

PURPOSE: ROM replacement to cure problems with local printing.

DISCUSSION: Some problems have been found with the DT-100 while performing local printing. The symptoms being, the printer may drop characters or print garbage. This problem has been remedied by installation of a new system ROM. This ROM is in position 1J on the logic board.

PROCEDURE:

(1) Check the ROM in the position 1J, if it is not a REV. H ROM, it must be replaced with the new ROM.

National Parts Part # MX-6722 Catalog # 26-6052

 COPYRIGHT © 1988

DATE: September 17, 1984

REVISION DATE: August 26, 1988

BULLETIN NO: I/O:76

PRODUCT: 26-6Ø52 DT-1ØØ

SUBASSEMBLY: AX-9522 Main Logic Board

SUBASSEMBLY REVISION: All

PURPOSE: ROM replacement to cure problems with local printing.

DISCUSSION: Some problems have been found with the DT-1ØØ while performing local printing. The symptoms being, the printer may drop characters or print garbage. This problem has been remedied by installation of a new system ROM. This ROM is in the position 1J on the logic board.

PROCEDURE:

(1) Check the ROM in the position 1J, if it is a revision earlier than REV. H, it must be replaced. REV. H or later ROMs are acceptable.

The ROM may be obtained from National Parts as:

Description	National Parts Number	Catalog Number
ROM REV. H cs = ACØØ	MXP-Ø1Ø9	26-6Ø52

DATE: October 1Ø, 1984

REVISION DATE: October 1Ø, 1984

BULLETIN NO.: I/O:77

PRODUCT: 26-6Ø52 DT-1ØØ

SUBASSEMBLY: N/A

PURPOSE: To discuss built in diagnostics on the DT-1ØØ

DISCUSSION/PROCEDURE: The Tandy DT-1ØØ has built into it's ROM some power-up diagnostics and some diagnostics which may be initiated from the keyboard. The power-up diagnostics, if they fail, will give an error code in the bottom right-hand corner of the screen. These codes indicate an error in the following areas:

ERROR CODE	SOURCE
Ø	RAM chip Ø or buffer
1	RAM chip 1 or buffer
9	Nonvolatile RAM
P	Control PROM
R	Display row buffer
X	Modem port
Y	Auxiliary port
Z	Microprocessor

Also availiable for help in troubleshooting are some diagnostics accessible from the keyboard for testing the ports and the keyboard. These tests may be activated via the setup screen by toggling the test parameter to on. Do not save the set up screen to memory for power-up, this will cause the self test to be executed constantly on power up. If this does happen hold down the space bar until the screen stops blinking and then press set-up to exit the self test. Pins 2 and 3 of the DB-25 connector must be shorted in both ports in order for the test to operate properly. As soon as you exit the set-up sceen the self-test will begin execution and if an error condition exists the screen will clear, a buzzer will sound and your error code will appear in the lower right hand corner. To test the keyboard hold down the spacebar until the screen stops blinking and each key you press will appear in the last row, 9th column. To exit the self test at any time hold down the set-up key.

DATE: October 18, 1984

REVISION DATE: October 18, 1984

BULLETIN NO.: I/O:78

PRODUCT: 76-1ØØ1 PT-21Ø Portable Terminal

SUBASSEMBLY: AX-9267 Modem PCB

PURPOSE: To correct and clarify the modem alignment procedure contained in the PT-21Ø Service Manual.

DISCUSSION: The modem alignment procedure as outlined in the PT-21Ø Service Manual is inaccurate and unclear. The following procedure should be used to adjust the transmitted mark (logic 1) and space (logic Ø) frequencies to 127Ø Hz and 1Ø7Ø Hz respectively, and the receiver frequency for optimum reception.

PROCEDURE: Use the following procedure:

1) Set switches as follows: speed = 3ØØ Baud
mode = Half Duplex
On Line

2) Attach temporary jumpers from CN1 pin 9 to CN1 pin 5 and from CN1 pin 1Ø to CN1 pin 1. These pull the INH signal and transmit data low.

3) Turn power on. A tone should be heard coming from the modem transmitter. Attach a frequency counter to IC5 pin 8

4) Adjust VR2 for a frequency of 1Ø7Ø Hz, +/-5 Hz on the frequency counter.

5) Remove the jumper from CN1 pin 1Ø to CN1 pin 1. A higher pitched tone should now be coming from the modem.

6) Adjust VR3 for a frequency of 127Ø Hz +/-5 Hz on the frequency counter

7) Remove jumper from CN1, pin 9 to CN1, pin 5.

Receiver Adjustment:

Adjustment of the receiver frequency requires that the PT-210 be receiving a data stream through its modem.

1) Set switches as follows:
speed = 300 Baud
Mode = Half Duplex
On Line

2) Turn power on and receive a data stream from the host unit.

3) Adjust VR1 for correct data as printed on the PT-210's printer.

DATE: December 14, 1984

REVISION DATE: December 14, 1984

BULLETIN NO.: I/O:79

PRODUCT: 26-3144 Speech/Sound Cartridge

SUBASSEMBLY: N/A

PURPOSE: To eliminate distortion caused by using the wrong transistor in the -5V power supply circuit

---

DISCUSSION: Some units where manufactured with a 2N29Ø7 transistor in a metal TO-2Ø case being used in position Q1 to generate the -5V supply for the cartridge. It has been found that this transistor has too small of a power dissipation rating which could lower the -5V supply thus injecting distortion into the sound. Units now being manufactured are using a MPS29Ø7 in a TO-92 case, which is able to dissipate more power an give more reliable operation.

PROCEDURE:

1.) If distortion is found to be a problem, check transistor Q1 to insure that it is in a TO-92 case. If it is not, replace it with the proper transistor.

2.) If transistor Q1 is to be replaced, replace it with a Motorola MPS29Ø7 transistor or equivelent in a TO-92 case.

The proper transistor may be ordered as:
Transistor MPS29Ø7 Catalog# 26-3144 Part# AMX-4187

DATE: December 14, 1984

REVISION DATE: December 28, 1984

BULLETIN NO.: I/O:8Ø

PRODUCT: 26-1254 DMP-2ØØ

SUBASSEMBLY: AX-9378 Master PCB

PURPOSE: To eliminate sensitivity to long strobe pulses.

DISCUSSION: The DMP-2ØØ printer has been found to be overly sensitive to long strobe pulses and will sometimes print double characters when used with a computer which sends a long strobe pulse. The Tandy 1ØØØ sends a strobe pulse of approximatly 4.5 microseconds and will therefore exhibit this problem when used with the DMP-2ØØ. To remedy this problem it is necessary to modify the strobe input at the printer to an edge triggered input.

PROCEDURE:

1.) On the component side of the board, cut the trace coming from pin 39 of IC16. This trace feeds underneath the IC and exits between pins 1 and 2 of IC16 on some boards and on others it feeds under the IC and exits between pins 6 and 7 of IC16. Use an ohmmeter to verify that you have the proper trace.

2.) Across the cut made in the previous step solder a 47Ø picofarad capacitor.

3.) Solder one lead of a 1ØK ohm 5% 1/4W resistor into the feedthrough extending from pin 1 of resistor pack RA8.

4.) Solder one lead of a 33K ohm 5% 1/4W resistor into one of the three unused feedthroughs on the ground plane next to the silkscreen of X2.

5.) Solder the remaining leads of these two resistors together as close as possible to the board, being careful not to short out any other leads or components.

6.) Solder a wire jumper from the point where these two resistors connect to pin 39 of IC16.

7.) Check your work carefully to insure that no components have been shorted and test the printer to verify proper operation.

Parts needed for this modification are as follows:

47Øpfd ceramic capacitor	Catalog# 26-9999C	Part# CF-7393
33K ohm 5% 1/4W resistor	Catalog# 26-9999R	Part# NØ324EEC
1ØK ohm 5% 1/4W resistor	Catalog# 26-9999R	Part# NØ281EEC

DATE: December 28, 1984

REVISION DATE: December 28, 1984

BULLETIN NO.: IO:Ø81

PRODUCT: 26-6Ø52, DT-1ØØ Data Terminal

PURPOSE: To define a Printer Protocol problem with the DT-1ØØ and explain the work-around.

DISCUSSION: When the DT-1ØØ is used with a communications protocol having a 7 bit word length, even parity, and two stop bits, the DT-1ØØ is randomly sending to the printer, the communication protocol's parity bit as the eighth data bit. This results in the DT-1ØØ randomly sending garbaged data to the printer. Note that because this problem occurs only when using a 7 bit communication protocol, it will not manifest itself when using the Xenix Operating System, which uses an 8 bit protocol.

PROCEDURE: There is insufficient ROM space to correct this problem in the firmware. When using the above protocol for communications (7 bit words, even parity, and two stop bits), the DT-1ØØ protocol could be set to (BAUD RATE), 8, N, and 1. This does not pose any major communications problems and allows the printer to work correctly. Some data going to the terminal screen may be garbaged, but the print out should be correct in most cases.

DATE: February 12, 1985

REVISION DATE: February 12, 1985

BULLETIN NO.: I/O:82

PRODUCT: 26-1256, DMP 21ØØ

PURPOSE: To describe the procedures for upgrading a DMP 21ØØ to a DMP 21ØØP.

PROCEDURE:

Before beginning the following upgrade procedure do a complete checkout of the printer. If the unit is not fully operational due to a power supply problem, driver board problem, or print head failure service will be required before proceeding. If a problem is noted with the Main logic board or internal data cable, bear in mind these components will be replaced in the upgrade procedure.

NOTE: Before beginning this upgrade, obtain the following materials from National Parts.

A.) DMP 21ØØP Owners Manual, part number MU26Ø1274
B.) DMP 21ØØP Main PCB , part number AX-946Ø.
C.) Internal data cable, part number AW-3216.

All of the above part numbers are available under category Number 26-1274.

DMP 21ØØ to 21ØØP upgrade procedure.

1.) Remove the top case of the DMP 21ØØ.

2.) Replace the internal data cable with AW-3216. (The pin outs of the DMP 21ØØ, and the DMP 21ØØP are different. Replacing this cable changes the pin outs to the 21ØØP configuration.)

3.) Swap the Main PCB (the large board mounted on top of the chassis) with part number AX-946Ø.

4.) The DIP switch configurations as listed on the sticker mounted under the head guide rails are not the same for the DMP 21ØØP. Therefore remove it. Insure the customer receives the DMP 21ØØP owners manual when the printer is returned. For the new DIP switch configurations the customer can reference this new owners manual.

5.) Reassemble the printer and run a complete operational test.

DATE: April 23, 1985

REVISION DATE: April 23, 1985

BULLETIN NO.: I/O:83

PRODUCT: PTC-64, 26-1269, Printer Controller

SUBASSEMBLY: AX-943Ø, Control PCB, All revisions prior to Rev. B

PURPOSE: To improve the reliability of the clock signal.

DISCUSSION: This modification is mandatory on all revisions of the control PCB prior to Rev. B. It consists of removing the clock inputs from three NAND gates and pulling these inputs high.

** Compliance With This Bulletin Is Mandatory **

PROCEDURE:

1. Test the unit for proper operation.

2. Cut the following pins where they are soldered to the circuit board:

   U2, pin 2
   U2, pin 4
   U2, pin 13

3. Bend the leads on the chip cut in step 2 up away from the circuit board.

4. Solder a jumper wire from each of the pins cut in step 2 to the +5V side of C3.

5. Test the unit for proper operation.

DATE: February 11, 1985

REVISION DATE: February 11, 1985

BULLETIN NO.: I/O:84

PRODUCT: 26-3650B PC-4A Pocket Computer

SUBASSEMBLY: N/A

PURPOSE: Describe the correct 1K RAM pack usage for the PC-4.

DISCUSSION: In the original PC-4 (26-3650) There is a memory backup protective circuit. When the one chip CPU in the 26-3650 was changed to the 26-3650A version, this memory backup circuit was removed. In order to retain this feature a new 1K RAM pack was designed for the new version PC. This new RAM pack incorporates the memory backup circuit in it.

The following table lists the correct RAM pack to be used with each PC.

POCKET COMPUTER	1K RAM PACK
26-3650 PC-4	26-3653
26-3650A PC-4	26-3653A
26-3650B PC-4A	26-3653A

DATE: February 15, 1985

REVISION DATE: February 15, 1985

BULLETIN NO.: I/O:85

PRODUCT: 26-1176 DC-2212 Modem

SUBASSEMBLY: Logic Board

PURPOSE: To correct a short on the logic board.

DISCUSSION: A power transistor was added, in manufacturing, to the logic board of the modem in an effort to provide better heat sinking for IC U25. In drilling the holes to mount this transistor, on some units one of the holes was inadvertently drilled too close to a trace on the component side of the board causing a short between the input and output of the 12V regulator (VR2). This will cause the output of the regulator to be 16-18V possibly causing other component failure.

****Compliance With This Bulletin Is Mandatory****

PROCEDURE:

1.) With an ohmmeter measure the resistance between pins 1 and 3 of VR2. If a reading of Ø ohms is obtained, perform the following modification.

2.) Remove the power transistor located between U25 and transformer T2 noting where the leads are soldered on the bottom of the board.

3.) Examine the holes where the power transistor was located and determine which hole is drilled thru the trace (this usually is the middle hole).

4.) Bend the lead associated with the suspect hole upwards out of the way of the other components on the board and solder a piece of wire wrap wire to this lead long enough to reach thru the hole to the spot on the the solder side of the board where the lead was soldered previously.

5.) Remount the transistor using the wire installed in the previous step in place of the bent up lead.

6.) Power on the unit and verify that the regulator now has 12V on it's output. The 5 volt supply will probably need to be readjusted using R42 after this modification. Test the modem for proper operation (the unregulated output of the regulator could cause failures in other areas).

DATE: February 22, 1985

REVISION DATE: March 11, 1985

BULLETIN NO.: I/O:Ø86

PRODUCT: DMP-11Ø, 26-1271

SUBASSEMBLY: AXX-9414, Control PCB Assembly

PURPOSE: To clarify working combinations of EPROMs, Masked ROMs, and programmed MPUs.

DISCUSSION/PROCEDURE: There are four acceptable combinations of firmware that will work in the DMP-11Ø. They are summarized in the table below.

P4	P12	P7	Jumper
MBM2732	MBM2764-3Ø	M5M8Ø5ØH-Ø57	J3
Empty	MBM2764-3Ø	M5M8Ø5ØH	J1
Empty	HN61364P	M5M8Ø5ØH	J1
MBM2732	HN61364P	M5M8Ø5ØH-Ø57	J3

NOTE: If it is necessary to replace any of these IC's, one of the above combinations MUST be used in the printer.

DATE: March 18, 1985

REVISION DATE: March 18, 1985

BULLETIN NO.: I/O:87

PRODUCT: 26-3612 Pocket Computer RS232 Interface

SUBASSEMBLY: AX-9335 PCB Lower A

PURPOSE: To discuss the component changes with the use of a new crystal in the oscillator circuit of the RS232 Interface.

DISCUSSION: Should it become necessary to replace the crystal in the RS232 Interface, crystal MLA153.6 is being replaced by crystal KF26Z3 from a different manufacturer. This replacement crystal has the same part number and the same value as the previous crystal however the surrounding components in the oscillator circuit must be changed when the new crystal is used.

PROCEDURE: In replacing the crystal in the oscillator circuit of the RS232 Interface insure that the correct components are used with the correct crystal as listed below.

REF. #	OLD VALUE	NEW VALUE
X-1	MLA153.6	KF26Z3
R12	33K	22K
R16	4.7M	10M
C11	47pF	15pF
C12	47pF	68pF

New part numbers are as follows:

Crystal,153.6 KHz KF26Z3 AMX-2992 (Same as old part #)
Resistor,Carbon 22K 1/4W 5% N-0311EEC
Resistor,Carbon 10M 1/4W 5% N-0482EEC
Capacitor,Ceramic 15pF 50V 5% CC-150DJCP
Capacitor,Ceramic 68pF 50V 5% CC-680JJCP

Rev'd - 7-22-86

DATE: May 6, 1985

REVISION DATE: July 9, 1986

BULLETIN NO.: I/O:88

PRODUCT: 26-1274 DMP 21ØØP

SUBASSEMBLY: AX-946Ø Control Logic Board

SUBASSEMBLY REVISION: Old Board number 34T777666
New Board number 34T778796

PURPOSE: To discuss the use of new ROM's on the Control Logic Board and the use of a new Control Logic Board.

DISCUSSION: DMP 21ØØP Control Boards (AX-946Ø) have undergone some changes. These changes involve replacing EPROMs with Mask ROMs so as to reduce the number of ICs necessary on the board. There is no change in the information contained in these new Mask ROMS but there are some different part numbers for these new Mask ROMs, as well as jumper configurations on the Control Logic Board which should be noted. Also, there will be a new revision board found in units with a serial number of 6967 and above. This new board is completely interchangeable with the original board, although there are some small differences. One difference is that the new board will substitute one Mask ROM for four EPROMs. An additional IC (IC 81, A 74LSØ4) has been added to change the active status of certain control signals used in the ROM chip select circuit. Figure 1 is a schematic which shows the area of the circuit that has been changed.

Printers with serial # Ø5ØØØ and below will contain Control Logic Board 34T777666 with the EPROM configuration listed in Table 1.

Table 1

Location	Manufacturers Part Number	Radio Shack Part Number	Jumper Configuration
IC 24	DCØ342P424	MP-ØØ19	PJ1 2-3
IC 25	DCØ342P423	MP-ØØ18	PJ2 2-3
IC 26	DCØ342P422	MP-ØØ25	PJ3 1-2
IC 46	DCØ342P425	MP-ØØ2Ø	
IC 47	DCØ342P426	MP-ØØ24	
IC 48	DCØ342P427	MP-ØØ23	

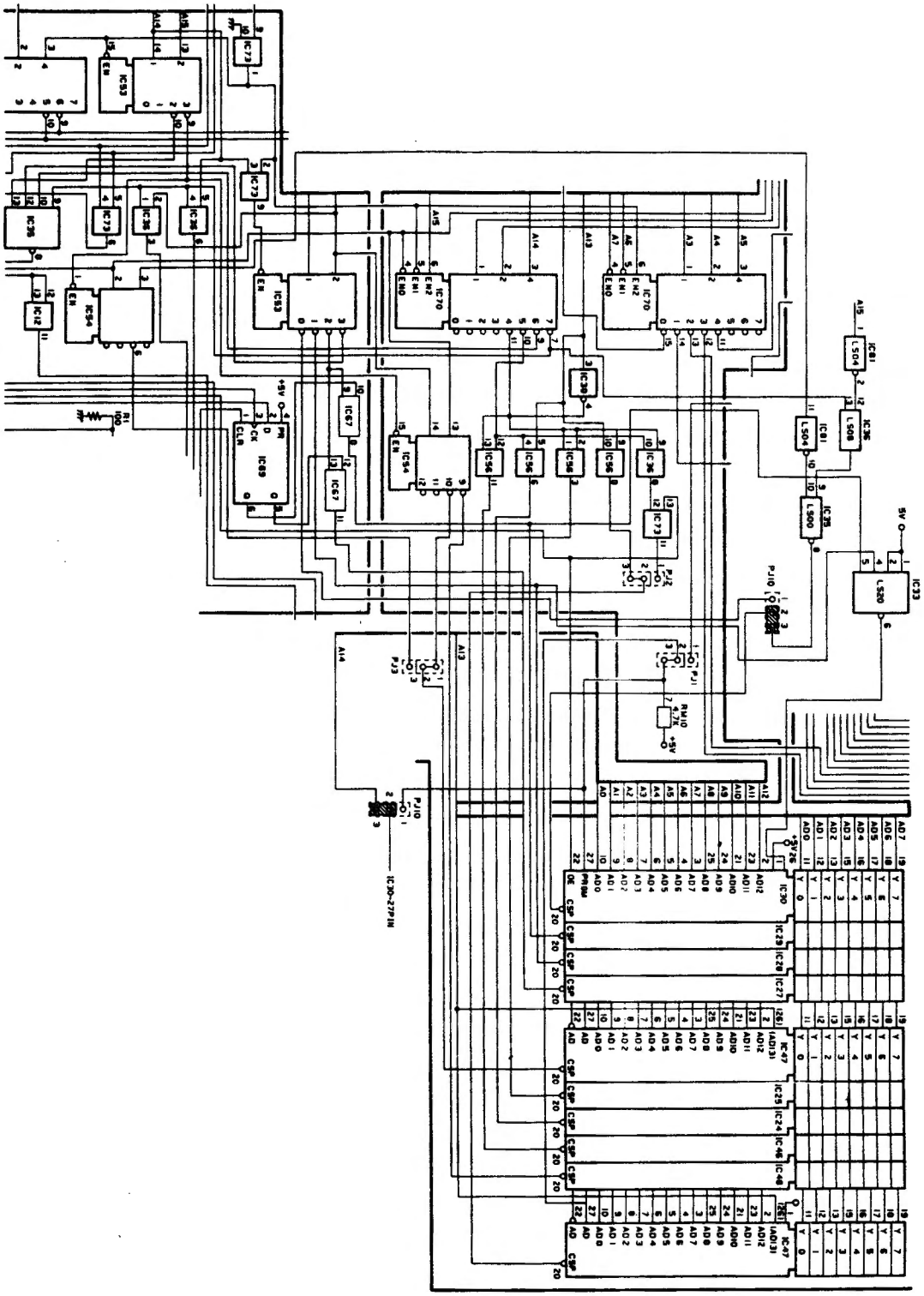

Figure 1

DATE: July 03, 1985

REVISION DATE: July 03, 1985

BULLETIN NO.: I/O:89

PRODUCT: 26-1257 DWP 210 Printer

SUBASSEMBLY: ART-4916 Carriage Assembly

PURPOSE: Additional alignment procedure to eliminate double vertical bar problem.

DISCUSSION: The procedure outlined below is a new alignment procedure for the DWP 210 printer. This procedure should be done in conjuction with the procedures outlined in the service manual on pages IV-10 and IV-11. Since the procedure outlined in this technical bulletin will effect the alignments listed in the service manual, this alignment procedure must be performed first.

Due to slight variations in the mesh between the print wheel gear and the select motor gear, it is possible that the print wheel may not always initialize to the same location. This variation will cause the petal of the print wheel to be slightly off center when the hammer strikes it. The hammer, which is V-shaped, misses the petal and strikes the ribbon which then leaves the double bar mark on the paper. This procedure is designed to eliminate the play in the print wheel gears and to insure that the petal is in the correct location when the hammer strikes it.

PROCEDURE:

1. Note the proper orientation of the carriage wire. This cable will need to be restrung later.

2. Remove the two carriage shaft screws. If they are stripped or won't budge use side cutters to cut into the side of them and rotate the cutters until the screw snaps free.

3. Remove the screw holding the upper rear carriage guide. Remove the carriage wire tension bar on the right side of the printer frame.

4. Remove the entire carriage assembly and shaft so that it is free from the printer. Remove the carriage shaft and set it aside. Remove the carriage wire so it is clear of any obstacles.

5. Carefully turn the entire carriage assembly around to expose the select motor.

6. Now turn the printer on, hold the home sensor closed and wait for the print wheel to come to a halt. Note the alignment of the petal with the hammer. By moving the hammer forward slowly you can see how the petal lines up (or should line up) with the hammer.

7. The first part of this alignment procedure is to reduce the play in the mesh of the select motor gear and the print wheel gear. There are three screws (see figure 1) around the select motor which can be loosened to adjust this. To check this, remove the print wheel and, using your finger, test the tension by rotating the print wheel gear slightly to see how much play is involved.

8. Loosen the three screws and adjust the tension between the two gears so that there is very little play between them. You want it to be snug but not too tight.

9. The second part of this alignment procedure is to align the petal to the hammer. There are two screws (see figure 1) which can be loosened to allow the select motor to be rotated on it's axis. Loosen these screws, rotate the select motor (observing the movement of the petal in relation to the hammer) until the petal matches up to the hammer.

10. Re-initialize the printer (by turning it off and on) to verify that the petal comes back to the same location. Do this several times until you are sure that the alignment is correct. You may need to go back and verify the first portion of this alignment to insure that the gear mesh is still correct.

11. Reassemble in reverse order. Proceed with the alignment of the Platen-to-Printwheel and Platen-to-Print Hammer adjustment as outlined on pages IV-10 and IV-11 of the DWP 210 service manual.

12. Test and verify proper operation.

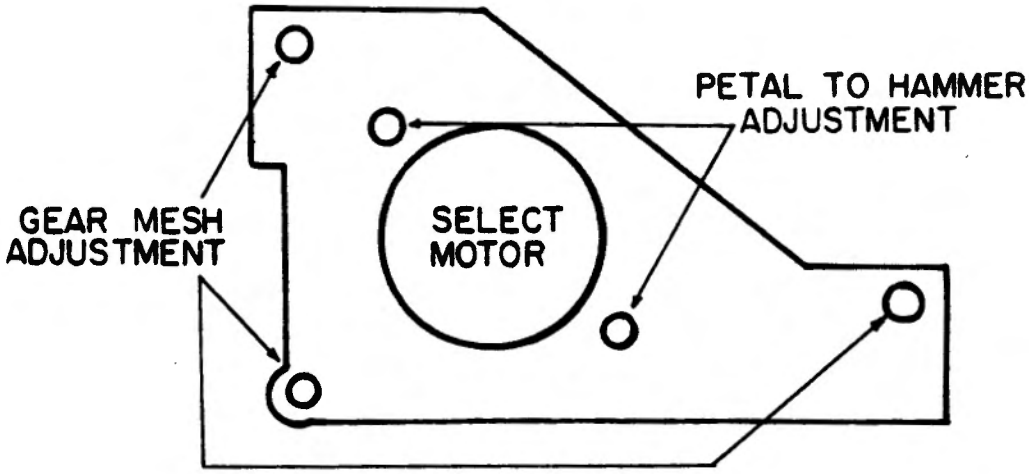

Figure 1

DATE: April 19,1985

REVISION DATE: April 19,1985

BULLETIN NO.: I/O:9Ø

PRODUCT: 26-1176 DC-2212 Modem

SUBASSEMBLY: AX-9ØØ8 Logic Board

PURPOSE: To prevent crystal oscillator from oscillating at it's third harmonic.

DISCUSSION:

The main clock oscillator circuit has been found to oscillate at the third harmonic causing intermitent communications problems. To correct this problem two resistors and one capacitor are changed in the circuit timing logic.

PROCEDURE:

PARTS REQUIRED:

3.3K ohm 5% 1/4W CF res.	Cat. No. 26-9999R	NP/No. N-Ø23ØEEC
39pfd 5% 5ØV cer. cap.	Cat. No. 26-9999C	NP/No. CC-39ØJJCP

CHANGE THE FOLLOWING PARTS:

R28 AND R29 from 33Ø ohm resistor to a 3.3K 5% 1/4W CF resistor.

C21 from 39Øpfd capacitor to 39pfd 5% 5Øv ceramic capacitor.

REASSEMBLE AND TEST

Is 33pf OK?
I saw one in
Ron Bobbyshell
2212

DATE: April 18, 1985

REVISION DATE: October 20, 1985

BULLETIN NO: I/O:91

PRODUCT: 26-1477 Sheet Feeder 510

SUBASSEMBLY: ART-0003 Paper Out Kit

PURPOSE: To clarify the procedure for installing the paper empty option on the Sheet Feeder 510.

DISCUSSION: The procedure for installing the paper empty option on the SF-510 is outlined in the Appendix of the Service Manual, pages A1 to A6. This Technical Bulletin will clarify the procedure.

PROCEDURE: The following modifications must be made to the printer:

1. Remove the top cover of the printer.

2. Remove the Cover Open Switch connector from CN20. Attach this connector to the male connector (black and white wires) on the cable assembly (designated "a" in Fig. A-1 on page A1 of the Service Manual).

3. Connect the female connector (red and black wires) to CN20.

4. Remove the screw which secures the Terminal Lug for the ground braid around the Control Panel Cable. Install the paper empty sensor ground wire (black) beneath this terminal, and reinstall the screw. (See Fig. A-3 on page A-2.)

5. Route the jack through the opening in the case of the printer right next to the fan (see Fig. A-4 on page A3), and replace the top cover.

The following modifications must be made to the Sheet Feeder:

1. Remove the left holder cover, two paper set levers, and the left side cover.

2. Remove the hopper guide plate which is secured to the rear stacker (see Fig. A-6, page A-5), and install the hopper 1 paper out switch in its place.

3. Remove the paper pressure plate by detaching it from the support shaft, and then removing the pressure plate supporter and the plate.

4. Install the hopper 2 paper empty sensor in the holes in the back of the front bin using the screws supplied in the kit. (See Fig. A-8, page A5.)

5. Connect the ground lug to the frame, and route the sensor wires as shown in Fig. A-10, page A6. Secure the cables to the front of their respective bins and to the frame with the clamps supplied in the kit.

6. Insert the cable bushing into the slot in the back of the Sheet Feeder.

7. Reassemble the left side cover, left holder cover, and the paper set levers.

8. Test the unit for proper operation. A sample BASIC program for testing purposes is listed below.

```
10 FOR J=75 TO 76
20 LPRINT CHR$(27);CHR$(J)
30 FOR I=1 TO 4000:NEXT I
40 LPRINT:LPRINT:LPRINT:LPRINT
50 LPRINTTAB(20);"THIS IS A TEST"
60 LPRINT:LPRINT:LPRINT:LPRINT
70 LPRINTTAB(20);"STILL A TEST"
80 NEXT J
90 GOTO 10
```

This program will feed one sheet from the front bin, print two lines on it, feed a sheet from the back bin, print two lines, etc. until one of the bins is out of paper. The Model II Family computers will report an "I/O Error".

IMPORTANT NOTE: The paper empty sensors will report the paper empty condition if either one of the bins are out of paper. When using the Sheet Feeder with the paper out option, <u>both</u> bins must have paper in them.

DATE: July 15, 1985

REVISION DATE: July 15, 1985

BULLETIN NO.: I/O:92

PRODUCT: 26-1277 DMP 430

SUBASSEMBLY: AX-9515 Main Logic Board

PURPOSE: To correct a problem with DMP 430 printers not working with a Model 2000.

DISCUSSION: DMP 430 printers with a serial number of 2501 and below may not work properly with Model 2000's. Indications are that the computer returns the prompt back to you as if it has just printed what you requested. This can also be demonstrated by going into basic, turning the trace function on, and run a short lprint loop. The computer will display each line of the program as if there was nothing wrong, however nothing will be printed.

These main logic boards have a flip flop in the ACK* circuitry which has both it's set and reset lines tied high. This will cause a problem on power up because the ACK* line doesn't power up in a known state every time. If the ACK* line is not in the correct state this will negate the strobe pulse coming from the Model 2000. The Model 2000 will think the DMP 430 is printing when in reality it is not.

Main logic boards that will require this modification can be identified by the presence of this flip flop circuit labeled CIRCUIT 2 on the schematic. To identify which board needs the modification, check for continuity between IC19 pin 9 and IC2 pin 5. If there is continuity then CIRCUIT 2 is present and the main logic board should be modified. If there is no continuity between these pins make sure to check continuity between IC19 pin 9 and IC25 pin 4. Continuity here will indicate that CIRCUIT 1 is present and that no modification is necessary.

This modification will tie the reset input of the flip flop to the master reset line thus insuring the ACK* line will power up into a known state every time.

PROCEDURE: Cut pin 1 of IC2 and lift this pin up away from the board. Run a jumper wire from the lifted pin to IC1 pin 2. Verify proper operation.

DATE: August 15, 1985

REVISION DATE: August 15, 1985

BULLETIN NO.: I/O:93

PRODUCT: 26-1176 DC2212 Modem

SUBASSEMBLY: AX-9ØØ8 Logic PCB.

PURPOSE: To eliminate problems caused by possible faulty relays.

DISCUSSION: Some relays found in the DC2212 Modem have been found to be faulty. Problems exhibited are extraneous characters on the video display when operating in terminal mode or troubles during pulse dialing. This is caused by the fact that the relay is not hermetically sealed which allows the contacts to pit more readily and therefore fail to maintain contact during operation.

The relay in question is in position K1. The old relay can be identified by the identification HB1-DC12V stamped on the side. The new relay has HB1E-DC12V-H51 stamped on the side.

PROCEDURE:

Determine if the relay in position K1 needs replacement using the criteria given above and replace if necessary with the part number given below.

Relay HB1E-DC12V Catalog# 26-1176 Part# AR-8ØØ6

RCVD 5-13-86

DATE: April 16, 1986

REVISION DATE: April 16, 1986

BULLETIN NO: I/O:94

PRODUCT: 26-1160 Tandon TM-100 Disk Drive

SUBASSEMBLY: ART-3002 Upper Arm Assembly

SUBASSEMBLY REVISION: N/A

PURPOSE: To describe an alternative to replacement of the load arm when the head load pad has worn out.

DISCUSSION: On the Tandon TM-100 5 1/4 inch floppy disk drive, the head load pad is part of the upper arm assembly (RS part # ART-3002). Often this entire assembly is replaced when the head load pad has worn out. However, this is not necessary. Pads are available under part number AHC-3011. These may be replaced separtely in lieu of the whole arm assembly.

PROCEDURE: The pads incorporate a sticky adhesive which is sufficient to hold them to the load arm. Avoid using glue. The old load pad can be removed with an exacto knife quite easily. Carefully peel it off, and make sure that no pieces remain behind. Position the new pad and tamp it down slightly to be sure it sticks to the arm. As much as possible, try to avoid touching the pad with your fingers.

Once the pad is installed, head amplitude should be checked to insure proper alignment. Loosen the retaining nuts and swing the arm assembly back and forth while observing head output on a scope. The pad should be centered over the head. Adjust for maximum amplitude. Refer to your diagnostic materials for proper test procedures and specifications.

Recd 9-11-85

DATE: August 19, 1985

REVISION DATE: August 19, 1985

BULLETIN NO.: I/O:94

PRODUCT: 26-1176 Modem DC2212

SUBASSEMBLY: Main Logic Board Rev A (AX-9008)

PURPOSE: To improve auto answer operation.

DISCUSSION: To make auto answer function more reliable, change resistor R36 from a 4.7K to a 10K ohm. National Parts number for this part is N-0281BEC. Any unit in for repair should be modified.

** **Compliance With This Bulletin Is Mandatory** **

PROCEDURE: Remove and replace R36 with a 10K resistor.

1-14-86 Jerry Heap SAYS DO NOT DO THIS ONE ANY MORE

DATE: August 28, 1985

REVISION DATE: August 28, 1985

BULLETIN NO: I/O:95

PRODUCT: 26-3144A Speech/Sound Cartridge

SUBASSEMBLY: AX-9576 Main logic board

PURPOSE: Prevent audible noise.

DISCUSSION: It has been found that at times the speech sound cartridge will create unwanted audible noise. The noise is coming from the SP0256-AL2 Speech Processor (U10). By insuring that the unused ''SER IN'' (Serial in) on pin 21 IC 10 is high and ''ALD*'' (Address load) on pin 20 has a pullup the problem is cured.

PROCEDURE: You have to install on the solder side of the board two 10k 1/4 W 5% resistors.

1. Join the two resistors at pin 7 (solder side) of IC 10.
2. Solder the free lead of one resistor to pin 20 of IC 10.
3. Solder the free lead of the other resistor to pin 21 IC 10.
4. Reassemble and check for proper operation.

The 10k 1/4 watt resistors are available from National Parts under part number N-0281EEC and catalog number 26-3144A.

10-22-85

DATE: September 24, 1985

REVISION DATE: September 24, 1985

BULLETIN NO: I/O:96

PRODUCT: 26-1176 DC 2212 Modem

SUBASSEMBLY: AX-9008 Main Logic Board Rev. E

PURPOSE: To reduce noise on signal filter U23.

DISCUSSION: The analog ground for this device may have noise present on it. This can cause the modem to be very susceptible to noise on the phone lines. This in turn can cause random characters to be received and displayed on the screen of a terminal.

PROCEDURE: Cut the trace on the solder side going to U23 pin 15. Wire a jumper from that trace to pin 16 of U23. Leave pin 15 unconnected. After doing the modification, check for proper operation.

Rcv'd 7-22-86

DATE: November 12, 1985

REVISION DATE: May 26, 1986

BULLETIN NO: I/O:97

PRODUCT: 26-1189 BPS 4ØØ Backup Power Supply

SUBASSEMBLY: AX-9212 Logic Board

SUBASSEMBLY REVISION: All Revision Levels

PURPOSE: To clarify proper wiring of the logic board, and to outline an alignment procedure for each of the boards found in the BPS 4ØØ.

DISCUSSION: Currently, there are three different logic boards for the BPS 4ØØ. These logic boards will be referred to by the number of adjustable potentiometers on the board. These are the 3 pot board, the 5 pot board, and the 6 pot board.

Additionally, there are two types of main transformers found in the BPS 4ØØ. The first type of transformer has secondary winding groups which connect to points 1 and 3, 5 and 8 and a center tap which connects to point 2 on the logic board (see the figures on pages 3 and 4). The second type of transformer has these same groups of windings, plus an additional winding group which would connect to points 6 and 7. These windings are color coded purple for point 6 and brown for point 7.

Note that all logic boards have four possible connection points. Two for CR5 and two for CR6. These are the charging diodes which rectify the incoming AC and connect to the battery charging regulator.

If the transformer is the first type **without** windings 6 and 7, then the diodes need to be connected to the innermost locations points for CR5 and CR6. These connect to the relay contacts 13 and 16 of K1. If the transformer is the second type **with** windings 6 and 7, then the diodes need to be connected to the outermost locations for CR5 and CR6. These connect to points 6 and 7 on the logic board.

Below is a listing of the wiring configuration. Notice that the holes on the logic board are numbered and a corresponding color code is given for each one. The list below gives this information in detail. If a hole number is not given, it is not used. Following this listing is a picture and an alignment procedure for each type of logic board.

This is the wiring configuration for the all three types of logic boards. The only difference would be the connection of the two additional wires 6 and 7, depending on the type of transformer used.

Connection #	Connection
1	Orange wire from transformer secondary
2	Red wire to coil L1
3	Green wire from transformer secondary
5	Blue wire from transformer secondary
6	Purple wire from transformer secondary (if applicable)
7	Brown wire from transformer secondary (if applicable)
8	Yellow wire from transformer secondary
9	Light blue wire from neutral side of incoming AC
9	White wire from neutral side of transformer primary
9	White wire from neutral side of accessory outlets
11	Black wire from hot side of transformer primary
11	Black (or Blk/Wht) wire to the Off/Reset switch
12	Black wire to AC fuse holder
13	Orange wire to Off/Reset switch
14	Blue/White wire to K2 relay coil (side facing front panel)
15	Red/White wire to K2 relay contact (side facing front panel)
16	Not used (Ground)
17	Brown or Brown/White wire to the alarm reset switch
18	Brown wire return from the alarm reset switch
19	Blue wire to K2 relay coil (the side facing the battery)
20	Yellow wire to yellow front panel indicator lamp
21	Red wire to red front panel indicator lamp
22	Black wire ground return from one of the lamps
22	Black wire ground return from the other lamp

Note: The Blue/White wire of connection 14 and the Red wire of connection 2 may be reversed on some units. Blue/White to 2 and Red to 14. **The wiring is still the same, only the colors are reversed.**

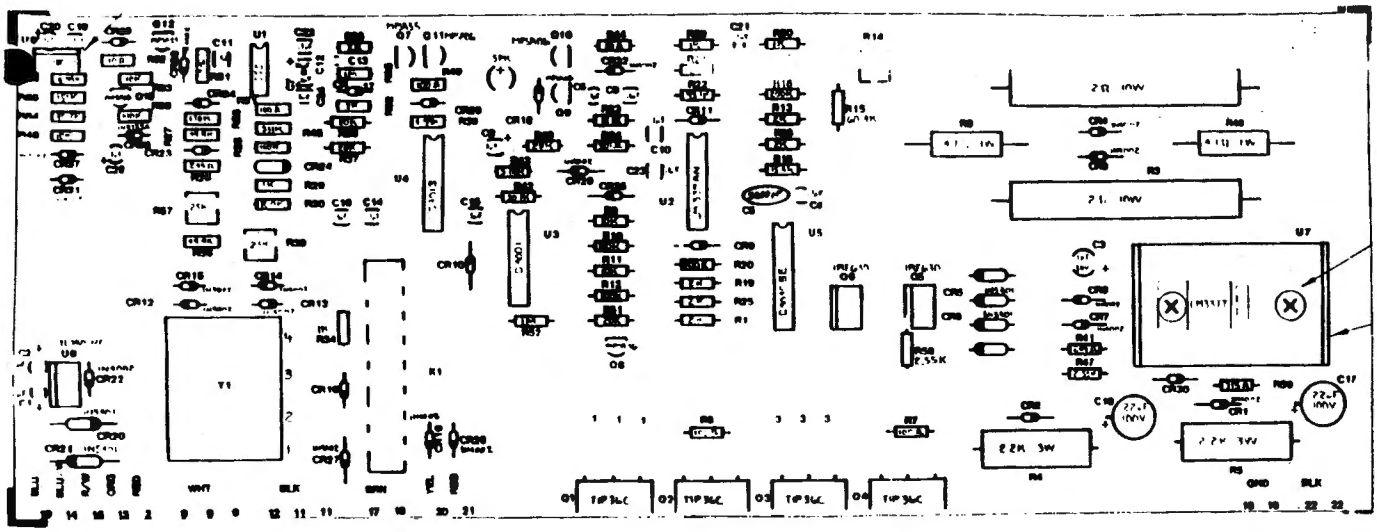

3 POT BOARD

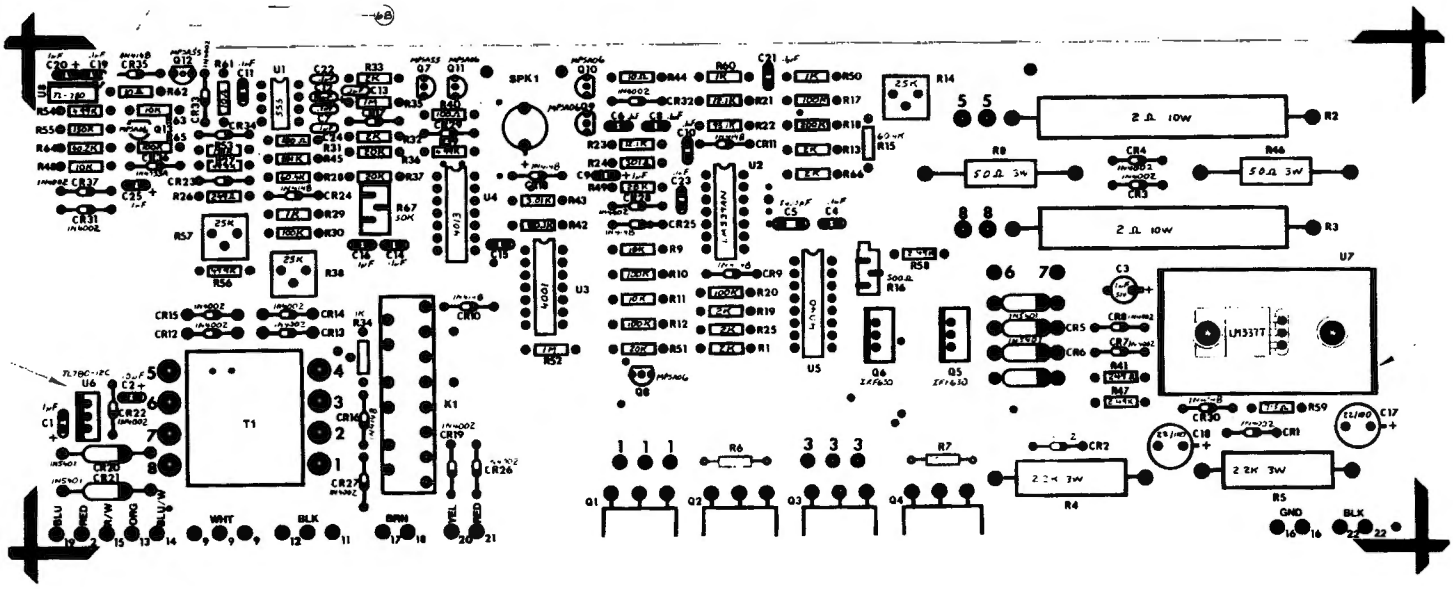

5 POT BOARD

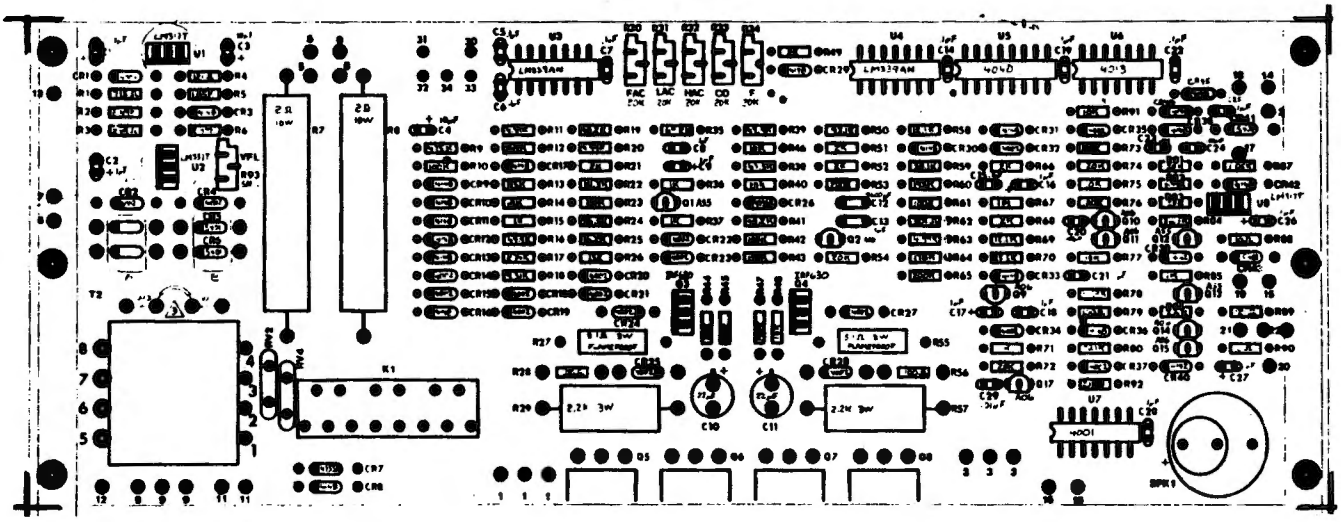

6 POT BOARD

DISCUSSION: Alignment procedures

Equipment needed:

1. Good, fully charged battery (24VDC, 8 to 1Ø Amp Hour rating) or a Variable DC power supply capable of 15 to 24 Volts DC

2. Voltmeter, AC/DC

3. Oscilloscope or frequency counter

4. Variable AC voltage source

PROCEDURE: 3 POT BOARD

1. Plug the variable AC voltage source into the wall outlet. It must be a grounded, 3 prong outlet. Next, plug the BPS 4ØØ into the variable AC source. This variable AC voltage source should be set to 12Ø VAC. By adjusting the variable AC source, a brownout condition can be simulated. A brownout condition is where the AC voltage may drop below a safe level (1Ø2 VAC +-1.5 VAC) for a short amount of time, and then rise back up to a normal level.

2. Turn on the BPS 4ØØ, wait a few seconds for the BPS 4ØØ to activate, and then check the battery voltage. It should be between 24 VDC and 27.5 VDC +-.5VDC. If the battery voltage is not above 24 VDC, allow the unit to charge for awhile, until the battery voltage exceeds 24 VDC. If the battery will not charge above 24 VDC, replace it with a known good battery to determine if the battery is bad or the charging circuit is bad.

3. To check the output frequency of the inverter AC, connect a frequency counter or oscilloscope to U5 pin 3. The frequency counter should show 6Ø Hz. The oscilloscope should show a square wave with a period of 16.67 msec. Adjust R14 accordingly.

4. Next, adjust the drop in point of the inverter transfer switch. This drop in point is the point at which the incoming AC voltage level has decreased below the safe level of 1Ø2 VAC +-1.5 VAC. To set this level correctly, turn R56 fully counter clockwise. Then turn the variable AC voltage source down to 1Ø2 VAC +-1.5 VAC. A convenient place to measure the AC voltage is pin 1 of T2 for the positive AC point and chassis ground for the negative AC point. Now turn R56 slowly clockwise until the unit switches to inverter mode. Once this has been done, test it by turning the variable AC voltage source back up to 12Ø VAC. Then slowly turn the AC voltage down and verify that the transfer occurs at the previously set level of 1Ø2 VAC +-1.5 VAC.

5. Finally, power down the BPS 4ØØ. Disconnect the battery and connect the variable DC power supply. Adjust the supply to 24 VDC. Then power up the BPS 4ØØ and adjust the variable DC power supply down to 2Ø.5 VDC +-.5 VDC. If the unit is adjusted properly, K2 should de-energize when the DC voltage reaches this range. Adjust R38 for the proper level.

5A. If a 24 VDC power supply is unavailable, connect a load to the output and remove the BPS 4ØØ AC chord from the wall outlet. This will begin running down the battery. Monitor the battery voltage with a DC voltmeter and adjust R38 as required to cause the inverter to shut down at 2Ø.5 VDC +-.5 VDC on the battery. Adjusting R38 clockwise will cause the unit to shut down at a lower battery voltage.

6. After this last procedure is complete, allow the unit to charge at least 24 hours to insure a full charge. Verify proper operation by connecting a load to the BPS 4ØØ, and then removing the BPS 4ØØ AC chord from the AC outlet. The load device should show no sign of power loss.

DISCUSSION: 5 POT BOARD

The procedures listed above apply to the 5 pot board as well. However, 2 new pots have been added. R67 is the upper limit drop in point. As the incoming AC voltage drops below approximately 1Ø2 VAC, the inverter is switched in. Then, as the incoming AC voltage begins to rise back to normal conditions, the inverter is switched back out (after approximately 3 seconds) once the incoming AC reaches a certain safe voltage. On the 3 pot board, this value was fixed at approximately 1Ø8 VAC. On the 5 pot board, there is now an adjustment that can be made to ensure that this upper limit is set correctly. Also, there is now an adjustment which controls the upper limit of the battery float voltage. This is controlled by R16.

PROCEDURE: 5 POT BOARD

1. Adjust R67 fully counter clockwise. Adjust the variable AC source down until the inverter switches in. This should be about 1Ø2 VAC. Now adjust the AC voltage back up to 1Ø8 VAC. Then adjust R67 clockwise a small amount, wait three seconds to see if the inverter switches back to line voltage, and keep adjusting R67 by small amounts and waiting 3 seconds until the inverter switches back to line voltage.

1A. To test this adjustment, adjust the variable AC source down until the inverter switches in. This should be about 1Ø2 VAC. Now increase the variable AC source 1 volt to 1Ø3 VAC, wait 3 seconds to see if the inverter switches back to line, and repeat this procedure until the transfer occurs. It should transfer back at 1Ø8 VAC +- 1.5 VAC. Adjust R67 clockwise to increase the high voltage return point and counter clockwise to decrease the high voltage return point.

2. The battery float voltage adjustment is done by R16. Allow the unit to charge completely. Verify that the voltage of the battery is 27.5 VDC +-Ø.5 VDC. Adjust R16 clockwise to increase the battery float voltage and counter-clockwise to decrease the battery float voltage. voltage to 27.5 VDC +-Ø.5 VDC.

   NOTE: You may not see an immediate change when adjusting this resistor. Allow the unit to charge several hours and then monitor the battery float voltage.

   To verify an exact alignment for this adjustment, a capacitive load may be substituted for the battery. A test fixture and a variable DC power supply or a good working battery will be needed. The test fixture can be constructed by using a 2ØØØ uF 5ØV electrolytic capacitor and a 2 position male DC power connector. Part numbers are as follows:

26-9999C CC-2Ø7ZJBA 2ØØØuF +8Ø/-2Ø 5ØV ALP (ALP stands for Aluminum Polar and is the same as electrolytic)

26-1189 AJ-4Ø27 Male connector pins, 2 Position DC
26-1189 AJ-4Ø29 Plastic connector, male.

2A. Make sure that switch S1 is in the off position. Also, make sure that the BPS 4ØØ is not connected to variable AC source. Disconnect the battery and connect the capacitive load.

2B. Apply the DC power supply or battery voltage to Point 13, which is an orange wire that connects S1 to the input of the 12V regulator, U6. Since it will be driving a 12V regulator, you will need at least 15 VDC to properly bias the regulator. Solder the positive DC wire directly to the logic board at point 13.

2C. Plug the BPS 4ØØ into the variable AC voltage source. Leave S1 in an off position. At this point K2 should energize. Measure the voltage at the connector with the capacitive load connected and adjust R16 for 27.5 VDC +- .5 VDC. Adjust R16 in a clockwise direction to increase the float voltage and counter-clockwise direction to decrease the float voltage.

2D. Once the adjustment is correct, unplug the BPS 4ØØ, disconnect the DC source from point 13, reconnect the battery, plug the BPS 4ØØ back into the wall outlet and allow the unit to charge up for at least 16 hours or until a proper battery float voltage has been reached. Test for proper operation.

DISCUSSION: 6 POT BOARD

The alignment procedure for the 6 POT BOARD is the same as the 5 POT BOARD except that the potentiometers are numbered different. The correct numbers for the adjustments are given below. The 6th pot, (R3Ø) is set at the factory and is not to be adjusted.

R3Ø	Fast AC adjust
R31	Low AC drop in point
R32	High voltage return
R34	Inverter frequency
R53	Low battery cuttoff point
R93	Battery float voltage level

Rcv'd 2-12-86

COPYRIGHT © 1985 TB I/O:98

TRS-80®

DATE: October 31, 1985

REVISION DATE: October 31, 1985

BULLETIN NO: I/O:98

PRODUCT: 26-6050 DT-1 Data Terminal

SUBASSEMBLY: AX-9258 Main Logic Board

PURPOSE: To keep the DT-1 from holding the DMP 130, DMP 430, or TRP 100 printers in a constant state of reset.

DISCUSSION: Pin 33 of the printer connector is wired to a reset line on the processor in the printer. At the DT-1 end, this pin is grounded. Thus, when the two are connected, the printer is always held in reset and will not do anything.

PROCEDURE: Since this reset function is used by IBM compatible hardware, it is not desirable to modify the printer. To modify the terminal simply cut pin 30 of connector J-6. See the attached illustration. A pull-up resistor is not required because there already is one in the printer.

Radio Shack®

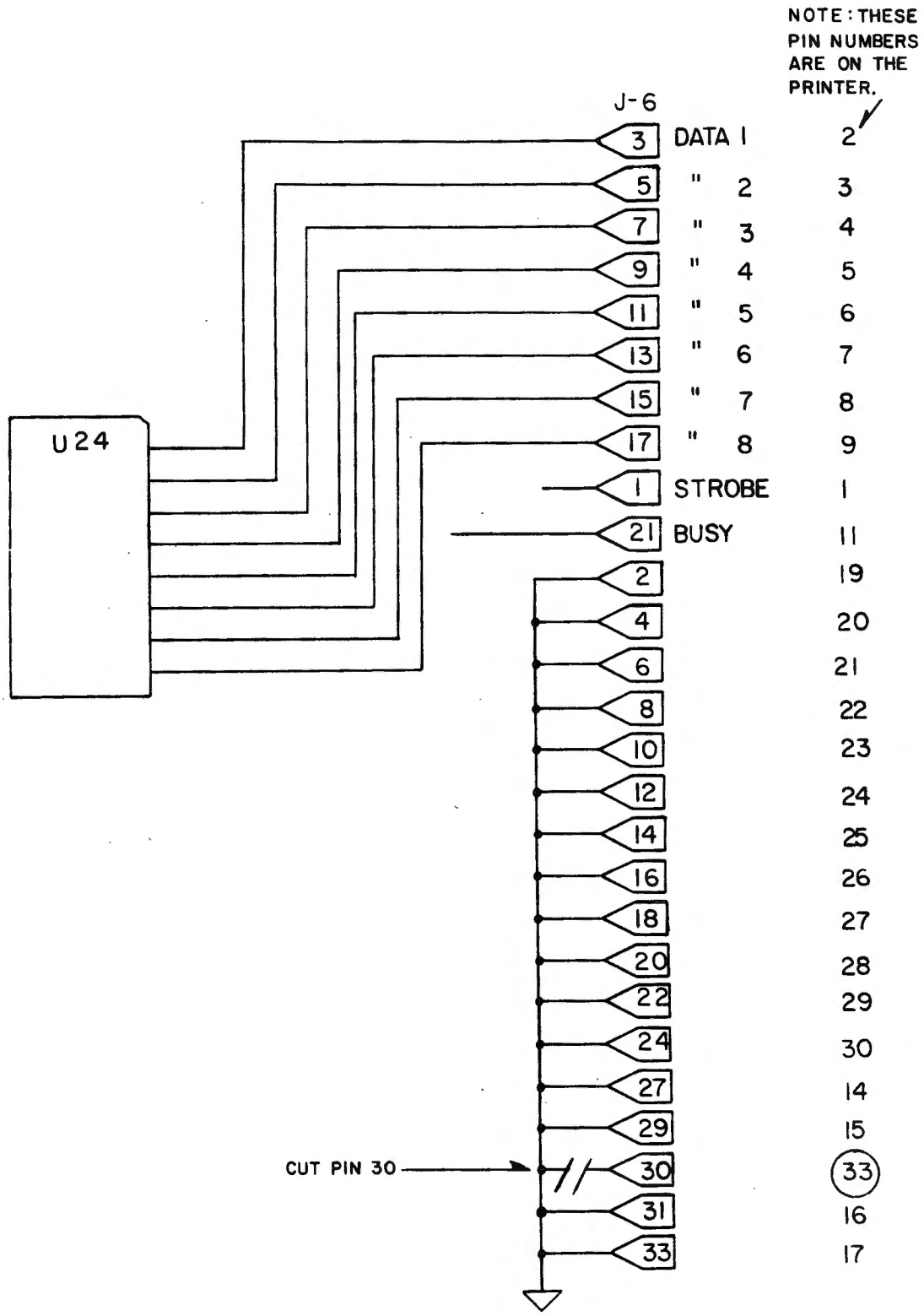
NOTE: THESE PIN NUMBERS ARE ON THE PRINTER.
J-6
U24
3 DATA 1 2
5 " 2 3
7 " 3 4
9 " 4 5
11 " 5 6
13 " 6 7
15 " 7 8
17 " 8 9
1 STROBE 1
21 BUSY 11
2 19
4 20
6 21
8 22
10 23
12 24
14 25
16 26
18 27
20 28
22 29
24 30
27 14
29 15
CUT PIN 30
30 33
31 16
33 17

Rcv'd 2-12-86

DATE: January 13, 1986

REVISION DATE: January 13, 1986

BULLETIN NO: I/O:99

PRODUCT: 26-1280 DMP-130

SUBASSEMBLY: AX-4008 Main Logic Board Revs. 1,2,3,4,5

PURPOSE: To discuss a change in the ROMs.

DISCUSSION: Due to occassional difficulty in obtaining 27128 ROMs, the vendor has combined all of the code this printer uses into a single ROM. It is designated as a type 27256. The new ROM will take the place of ROM 2 which is P5 on the logic board. In units where this new chip will be used, ROM1 (P6) will be deleted altogether.

Note: There is no operational enhancement with the new ROM.

PROCEDURE: Remove and replace ROM 2 with the new ROM 2. Remove ROM 1. It will no longer be needed with the new ROM. Open jumpers J1 and J3. Close jumpers J2 and J4. The jumpers are located on the logic board. J3 and J4 are in between ICs P1 and P4. J1 and J2 are located beteween ICs P8 and P9. Note: National Parts will continue to stock the old two ROM set for as long as they are available.

The following Radio Shack part number applies to this bulletin:

RS part #	Description
MX-7025	LSI MBM27256 ROM 2

10-8-86

DATE: December 2, 1985

REVISION DATE: September 8, 1986

BULLETIN NO: I/O:1ØØ

PRODUCT: 26-1245 Tandy Disk Cartridge System
26-1246 Drive 1 Upgrade Kit

SUBASSEMBLY: Entire item

SUBASSEMBLY REVISION: N/A

PURPOSE: To describe controller ROM replacement to enable the use of a secondary cartridge drive.

DISCUSSION:

In order for a secondary disk cartridge drive to work successfully, the controller ROM U33 must be at least code version 65 in addition to the installation of the secondary drive unit. This is to allow correct spinup/spindown of the secondary drive.

If the code version of the U33 ROM is 65 or greater, only the installation of the secondary drive unit need be performed.

** **Compliance With This Bulletin Is Mandatory** **

PROCEDURE:

For instructions on the mechanical installation of the secondary drive unit, refer to the instruction pamphlet enclosed with the upgrade kit.

When you have reached the point in the upgrade procedure where you have removed the primary disk cartridge unit and controller board from the case, perform the following steps:

1) Remove the four (4) slotted screws which attach the controller board to the top of the primary cartridge drive. The controller is the large board which is oriented component side down on the top of the drive unit.

2) Examine the old ROM in position U33 and compare the material on its identification label to the table below. **If it is code version 65 or later, do not replace it.**

ROM label	Code Version	Replace?(y/n)
IOMEGA A1ØH CONTROL U33 PN ØØ7192Ø2	63	Yes
IOMEGA A1ØH CONTROL U33 PN ØØ7192Ø3	64	Yes
IOMEGA A1ØH CONTROL U33 PN ØØ7192Ø4	65	No
IOMEGA A1ØH CONTROL U33 PN ØØ19Ø4ØØ	67	No
IOMEGA A1ØH CONTROL U33 PN ØØ19Ø4Ø1	68	No

3) If the U33 ROM needs to be replaced, remove the old U33 ROM on the board and replace it with the new ROM which should be labelled "IOMEGA A1ØH, CONTROL U33, PN ØØ7192Ø4". This ROM should come with the upgrade kit; if it did not, it may be obtained as:

Part # MX-4341, Cat. # 26-1246

3) Replace the controller board on the primary cartridge drive.

4) Continue with the remainder of the upgrade procedure.

When you have completed the upgrade procedure, test both cartridge drives under diagnostics and Xenix Ø3.Ø1.ØØ (or later). If the disk cartridge system is to be used with an MS-DOS system, format and test the operation of both drives with the appropriate version of MS-DOS.

DATE: May 12, 1986

REVISION DATE: June 23, 1987

BULLETIN NO: I/O:1Ø1

PRODUCT: 26-6Ø13 Multiterminal Interface Board

SUBASSEMBLY: AX-7981 Multiterminal Interface Board

SUBASSEMBLY REVISION: Rev. PP2, Rev. Blank

PURPOSE: To prevent terminal overrun problems on the Multiterminal Interface Board in a Xenix environment. This problem may be seen when using DT1ØØ's and Profile 16 or similiar packages, and is manifested by malfunction of the arrow keys on the terminal's keyboard.

DISCUSSION:

To prevent terminal overrun on the Multiterminal Interface Board, which may be produced by sending multi-byte control strings (such as those produced by the arrow keys on a DT1ØØ), three cuts and three jumps are necessary on the Multiterminal Interface Board. This problem is most frequently manifested in a Xenix environment by using DT1ØØ terminals with applications packages (i.e. Profile 16, Scripsit 16) where the arrow keys will seem to malfunction.

Note: This modification, under certain circumstances, may cause the ports on the modified card to "hang", lock up, or otherwise cease normal operations with seemingly no provocation, particularly when used with modems. It is recommended that this modification be applied only if the ports are being used with terminals running at high (greater than 24ØØ) baud rates. If the card is to be used with modems, the modification should not be performed, or, if the card is already modified, the jumpers for this modification should be removed, and the trace cuts re-bridged.

PROCEDURE:

On the solder side of the Multiterminal Interface Board, perform the following modifications:

(1) Cut the trace at U16, pin 23.
(2) Cut the trace at U17, pin 23.
(3) Cut the trace at U19, pin 23.
(4) Install a jumper from U16, pin 14 to U2, pin 4.
(5) Install a jumper from U17, pin 14 to U4, pin 4.
(6) Install a jumper from U19, pin 14 to U7, pin 4.

After the modifications are complete, test the board with diagnostics and in a Xenix environment for correct operation.

DATE: April 3Ø, 1986

REVISION DATE: April 3Ø, 1986

BULLETIN NO: I/O:1Ø2

PRODUCT: 25-1ØØ3 3ØØ Baud Modem

SUBASSEMBLY: AX-9579 PCB, Modem

SUBASSEMBLY REVISION: Rev. "blank"

PURPOSE: To eliminate garbled received data.

DISCUSSION: Some of the 3ØØ baud internal modem boards may experience unwanted or garbled characters on received data. This is caused by excessive noise on the +5V power supply line. In order to remedy this a capacitor is to be installed on the modem board across this line.

** **Compliance With This Bulletin Is Mandatory** **

PROCEDURE:

1.) Install a 33ufd tantalum capacitor across the +5V line on the component side of the modem board with the negative lead at the feedthrough indicated by point A and the positive lead at point B (see figure 1).

33ufd Tantalum Cap Part# CC-336MDCT Catalog# 26-9999C

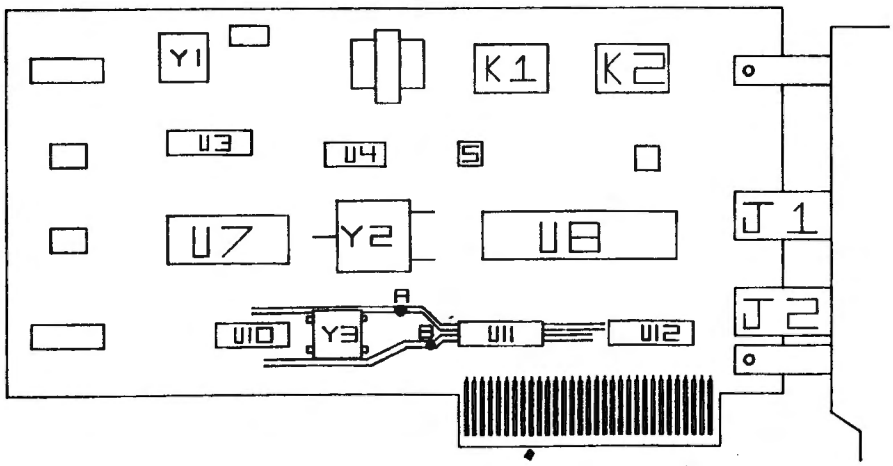

Figure 1

DATE: June 17, 1986

REVISION DATE: June 17, 1986

BULLETIN NO: I/O:1Ø3

PRODUCT: 26-1189 BPS 4ØØ Backup Power Supply

SUBASSEMBLY: ACS-ØØ14 Battery Replacement Kit

SUBASSEMBLY REVISION: All revision levels.

PURPOSE: To explain installation procedures for the new batteries being used in the Backup Power Supply.

DISCUSSION: Backup Power Supply batteries may be going bad after several complete cycles of charging and discharging. These batteries are blue in color and are manufactured by SAFT. Symptoms include the battery not charging completely (to 27.5 VDC), not supplying inverter power for at least 9 minutes after transfer, and K2 opening up as soon as inverter power is switched in. Backup Power Supplies needing battery replacement will be using a new battery from Panasonic which is slightly smaller than the old battery. If a unit needs a new battery, a replacement kit can be ordered under National Parts number ACS-ØØ14, catalog number 26-1189. This kit will include the new battery, spacers and a battery mounting bracket. Instructions for installing this kit are given below. Refer to FIGURE 1 for further clarification.

PROCEDURE:

1. Remove the four case screws from the bottom of the unit.

2. Disconnect the battery. Remove the two screws holding the battery mounting bracket. Remove the bracket, and the battery.

3. Install the spacers provided with the new battery kit. These spacers should have regular non-stick foam on one side and double sided tape on the other side. The side with the double sided tape must be used to mount the spacers to the bottom of the chassis. The battery sits on top of the non-stick foam. Position the spacers as wide as possible in the battery recess, running from the front of the unit to the back of the unit, for maximum support.

4. Place the new smaller battery squarely over the spacers and flush up against the rubber bumpers which are connected to the transformer bracket.

5. Install the new battery bracket, supplied with the kit, over the battery. Use the two screws removed in step 2 to secure the bracket over the new battery. This new bracket should also have non-stick foam to further cushion the battery.

6. Reconnect the battery, and charge it for at least 16 hours prior to use in order to insure a good charge. Verify proper operation by plugging in a load (i.e., a computer) to the already charged BPS 4ØØ. Turn on the load, and then unplug the BPS 4ØØ from it's AC outlet. The load should exhibit no loss of power, the BPS 4ØØ should be beeping, and the red alarm lamp should be flashing. Plug the the BPS 4ØØ back into the AC outlet, wait approximately 3 seconds, and verify that the inverter switches back to line power. The yellow lamp should remain flashing to indicate that there was a power loss. Pressing the reset switch should stop the yellow lamp from flashing, and exhibit a continual glow, indicating that the unit is now charging the battery. Throughout this procedure, the load should remain on and show no sign of power loss.

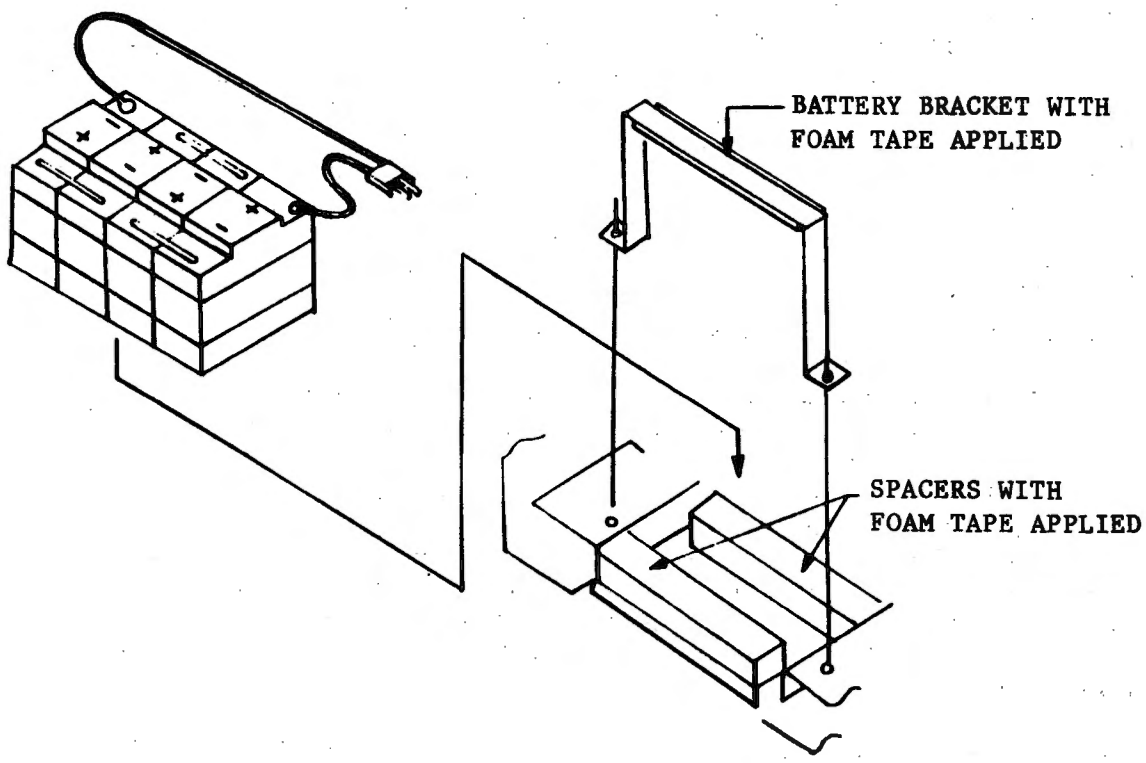

FIGURE 1

 COPYRIGHT © 1986

DATE: June 23, 1986

REVISION DATE: June 23, 1986

BULLETIN NO: I/O:1Ø4

PRODUCT: 26-1245 Disk Cartridge System

SUBASSEMBLY: Boschert Power Supply

SUBASSEMBLY REVISION: N/A

PURPOSE: To remedy possibly unstable or overly low output voltages which may cause erratic malfunctions of the disk cartridge drives.

DISCUSSION:

Some of the Boschert power supplies used in the Disk Cartridge System had faulty potentiometers installed at R24. This potentiometer serves to adjust both the +5V and +12V outputs. Symptoms may include low voltages (both +5V and +12V), random read/write errors, unexplainable spin-down of both drives, scrambled information, and lost data. This symptoms may be very intermittent and therefore difficult to duplicate.

PROCEDURE:

If the date code stamped on the power supply transformer is **8549** or earlier (i.e. a number which is less than 8549), replace the potentiometer at R24 with:

Part # AP-7Ø2Ø, Cat. # 26-1245.

With the system fully reconnected, power up the unit and adjust R24 to obtain +5.ØØ - +5.2ØV on the +5V output and +11.95 - +12.25V on the +12V output. Reassemble the unit, and test for proper operation under diagnostics.

Note: **This modification applies only to the Boschert power supply.** It is not to be applied to the Astec power supply. The Boschert supply may be identified by the "Boschert Inc." silk-screened on the component side of the board near the 4-pin Molex type connector. Additionally, there is a sticker on top of the transformer which says "Boschert Power Supply" which also has the model number and the date code mentioned above printed on it.

DATE: June 19, 1986

REVISION DATE: June 19, 1986

BULLETIN NO: I/O:1Ø5

PRODUCT: 26-125Ø Daisy Wheel 41Ø Printer

SUBASSEMBLY: AXX-5Ø37 Carriage Subassembly

SUBASSEMBLY REVISION: A11

PURPOSE: To explain alignment of shift magnets after replacement.

DISCUSSION: The Daisy Wheel 41Ø service manual does not contain any discussion of shift magnet adjustments. Refer to this bulletin for the necessary information.

PROCEDURE: The following procedure applies for both upper and lower magnets:

1. Loosen the two hex head screws that secure the magnet to the carriage assembly.
2. Push the shift arm against the shift stopper of the corresponding magnet.
3. Insert a .1Ø mm thickness gauge between the magnet and the shift arm.
4. With the gauge still inserted between the arm and the magnet, carefully tighten the hex head screws.
5. When this is done remove the .1Ø mm gauge. With the arm still touching the stopper, confirm that a .Ø8mm gauge will fit in the space between them. Also confirm that a .11 mm gauge will not.

Refer to the drawing for detail.

These magnets will be available under National Parts number AHC-Ø374, catalog number 26-125Ø.

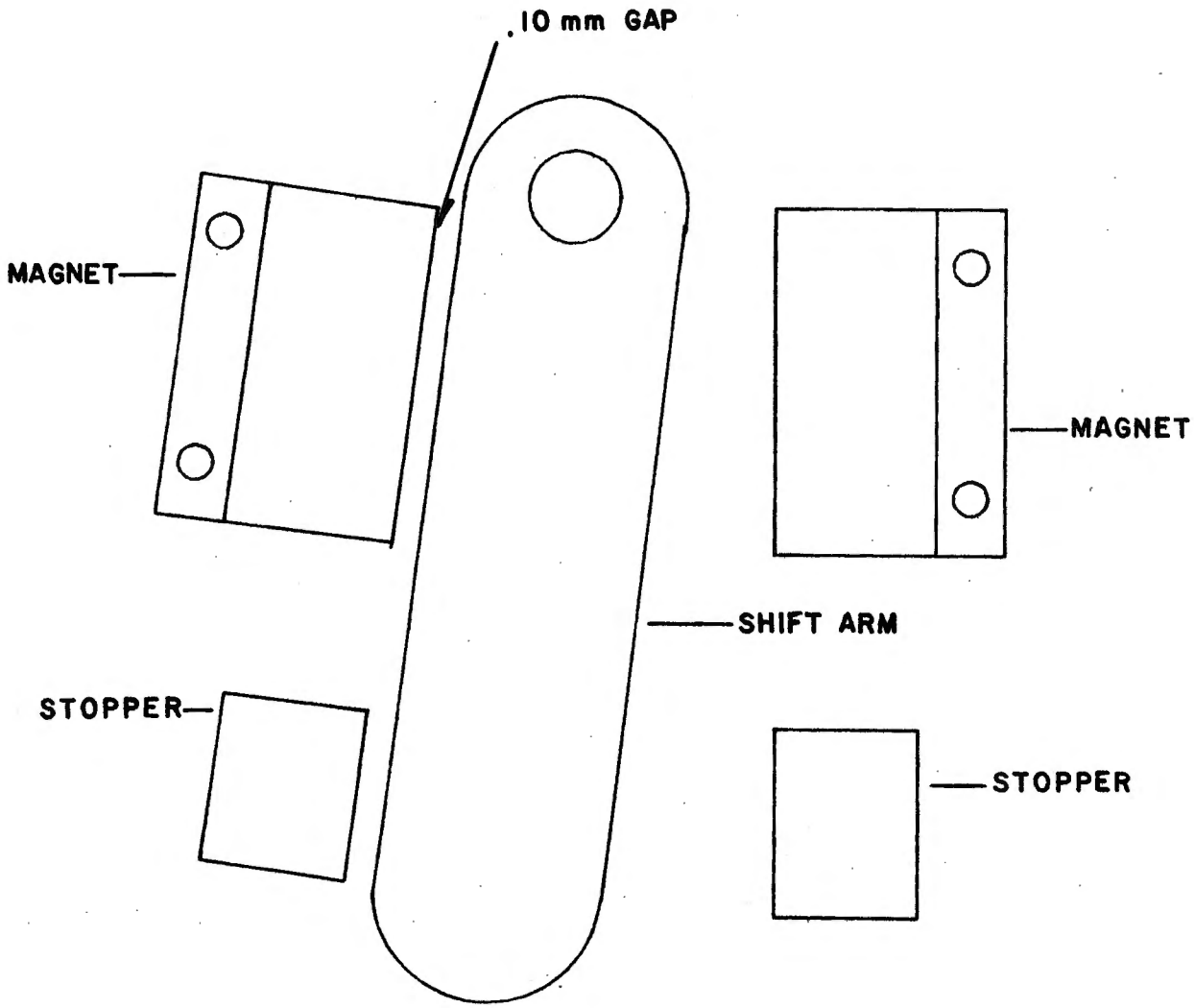
.10 mm GAP
MAGNET
MAGNET
SHIFT ARM
STOPPER
STOPPER

DATE: June 27, 1986

REVISION DATE: June 27, 1986

BULLETIN NO: I/O:1Ø6

PRODUCT: 26-1176 DC-2212 Modem

SUBASSEMBLY: AX-9ØØ8 Main Logic Board

SUBASSEMBLY REVISION: All

PURPOSE: To insure proper ring detect when connected to 5ESS central office equipment.

DISCUSSION: The telephone operating companies are beginning to change over to a new type of central office equipment known as 5ESS. This switch incorporates many features that have never been available to residential phone customers. The system is not referenced to earth ground as earlier exchanges have been. In practice this means that the ring voltage, while showing 9Ø volts or better peak to peak, may be riding on a reference of minus 6Ø volts. This reference may vary as well from one exchange to the next.

The ring detect circuit of the DC-2212 expects to see a voltage which will cause a steady state output to pin 19 of the MPU chip during the ring. In the example given above, the ring may produce a clocking signal instead of a steady high which the processor in the modem will assume is merely noise and ignore. Under these circumstances, the unit will never auto answer.

PROCEDURE: To solve this problem, install a 33uf, 35v electrolytic capacitor in parallel with C37. Be sure to observe proper polarity. This will raise the average voltage going to transistor Q1.

Note: Because of variance from one 5ESS to the next, it may be necessary to try different values. This one will provide a starting point. Before attempting this modification, consult the local phone company to insure that 5ESS is actually in use.

This part can be ordered from National Parts under catalog number 26-9999C, part number CC-336MGNP.

 COPYRIGHT © 1986

DATE: August 15, 1986

REVISION DATE: October 27, 1986

BULLETIN NO: I/O:1Ø7

PRODUCT: 25-3Ø22 1Ø Meg Disk Cartridge Interface (1ØØØ/12ØØ/3ØØØ)

SUBASSEMBLY: AX-91Ø3 Interface PCB

SUBASSEMBLY REVISION: Ø44Ø4ØØ-ØØ1 (found near interface cable connection)

PURPOSE: To enable the Disk Cartridge System to operate in a Xenix environment in conjunction with the Tape Cartridge System in a Tandy 3ØØØ.

DISCUSSION:

There is a conflict when both the 1Ø Meg Disk Cartridge System Interface and the Tape Cartridge Interface are installed in a Tandy 3ØØØ running Xenix. For Xenix operation, these two devices share the same DMA channel. When using the tape cartridge drive under these circumstances, the disk cartridge interface board will turn on and add some additional bytes to the tape cartridge data stream, causing scrambled data. To correct this problem, it is necessary to modify the disk cartridge interface. These modifications will not affect MS-DOS operation.

PROCEDURE:

These modifications are to be performed on the 1Ø Meg Disk Cartridge Interface Board <u>only</u>.

1) Cut U21, pin 9 and bend it upward. **Do not cut the trace, as it continues onward to the card edge connector.**

2) Jumper U25, pin 6 to U24, pin 5, on the solder side of the board.

3) Jumper U22, pin 9 to U24, pin 4, on the solder side of the board.

4) Jumper the lifted U21, pin 9 to U24, pin 6 on the component side of the board.

Verify correct operation using diagnostics and Xenix.

 COPYRIGHT © 1987

DATE: August 15, 1986

REVISION DATE: June 29, 1987

BULLETIN NO: I/O:108

PRODUCT: 25-3021 Tape Cartridge Interface

SUBASSEMBLY: AX-6006 Interface PCB

SUBASSEMBLY REVISION: A11

PURPOSE: To allow the TCS-100 to work in a Xenix environment.

DISCUSSION:

The interrupt circuit as initially implemented on the tape cartridge interface board is not very efficient in a multi-user environment like Xenix. In order for the TCS-100 to work with Xenix effectively, it is necessary to install a new PAL at U4 on the interface board. This modification will not adversely affect MS-DOS operation.

** **Compliance With This Bulletin Is Mandatory For Xenix Operation** **

PROCEDURE:

1) Remove the old PAL at U4 on the tape cartridge interface board.

2) Install the new PAL at U4 (checksum 2377).

3) **For Xenix operation,** jumper:

ADDR SEL B
ADDR SEL D
ADDR SEL E
ADDR SEL G
DRQ3
DACK3
IRQ3

For MS-DOS operation, jumper:

ADDR SEL B
ADDR SEL D
ADDR SEL E
ADDR SEL G
DRQ1
DACK1
IRQ2

4) Check for correct operation with diagnostics and the operating system which will be used with the board.

The new PAL is available as:

Part # MXP-0496, Cat. # 25-3021

 COPYRIGHT © 1986

DATE: August 15, 1986

REVISION DATE: December 9, 1986

BULLETIN NO: I/O:1Ø8

PRODUCT: 25-3Ø21 Tape Cartridge Interface

SUBASSEMBLY: AX-6ØØ6 Interface PCB

SUBASSEMBLY REVISION: A11

PURPOSE: To allow the TCS-1ØØ to work in a Xenix environment.

DISCUSSION:

The interrupt circuit as initially implemented on the tape cartridge interface board is not very efficient in a multi-user environment like Xenix. In order for the TCS-1ØØ to work with Xenix effectively, it is necessary to install a new PAL at U4 on the interface board. This modification will not adversely affect MS-DOS operation.

** **Compliance With This Bulletin Is Mandatory For Xenix Operation** **

PROCEDURE:

1) Remove the old PAL at U4 on the tape cartridge interface board.

2) Install the new PAL at U4 (checksum 2377).

3) **For Xenix operation,** jumper:

ADDR SEL B
ADDR SEL D
ADDR SEL E
ADDR SEL G
DRQ3
DACK3
IRQ3

For MS-DOS operation, jumper:

ADDR SEL B
ADDR SEL D
ADDR SEL E
ADDR SEL G
DRQ1
DACK1
IRQ2

4) Check for correct operation with diagnostics and the operating system which will be used with the board.

The new PAL is available as:

Part # MX-7453, Cat. # 25-3Ø21

 COPYRIGHT © 1986

DATE: August 15, 1986

REVISION DATE: October 16, 1986

BULLETIN NO: I/O:108

PRODUCT: 25-3021 Tape Cartridge Interface

SUBASSEMBLY: AX-6006 Interface PCB

SUBASSEMBLY REVISION: A11

PURPOSE: To allow the TCS-100 to work in a Xenix environment.

DISCUSSION:

The interrupt circuit as initially implemented on the tape cartridge interface board is not very efficient in a multi-user environment like Xenix. In order for the TCS-100 to work with Xenix effectively, it is necessary to install a new PAL at U4 on the interface board. This modification will not adversely affect MS-DOS operation.

** **Compliance With This Bulletin Is Mandatory For Xenix Operation** **

PROCEDURE:

1) Remove the old PAL at U4 on the tape cartridge interface board.

2) Install the new PAL at U4 (checksum 2377). Check for correct operation using diagnostics and Xenix.

The new PAL is available as:

Part # MX-7453, Cat. # 25-3021

DATE: August 8, 1986

REVISION DATE: August 8, 1986

BULLETIN NO: I/O:1Ø9

PRODUCT: 25-3Ø2Ø Tape Cartridge System

SUBASSEMBLY: AXX-51Ø4 Tape Drive Mechanism

SUBASSEMBLY REVISION: All revision levels.

PURPOSE: To discuss the beginning of tape and end of tape sensing circuit and possible failures which may occur.

DISCUSSION:

Some tape cartridge units are not recognizing the lower tape hole (LTH) and upper tape hole (UTH) signals causing the tape to be torn off the hub in the tape cartidge. One of the possible causes are filter capacitors in the LTH and UTH sense circuit. These capacitors are .ØØ1 uF (1ØØØ pF) and can be identified as being in a small rectangular yellow package. The specific capacitors in question are C23, C24, C49, and C5Ø.

This sense circuit uses two infrared photo-transmitter and photo-receiver circuits. A schematic of this circuit is provided in Figure 1. A mirror in the tape cartridge reflects the infrared beam from the transmitter to the receiver. This then causes the LTH or UTH signal to go true (TTL high). This change in logic level is transferred through the sense circuit and sent to the processor. Figure 1 shows the schematic for the sense circuit. TP1Ø and TP11 can be monitored to determine if the sensor is working. A small mirror can be used to reflect the infrared beam back to the receive sensor.

PROCEDURE:

Use a small mirror to reflect the infrared beam to the receiver circuitry. Monitor test points 1Ø and 11 with an oscilloscope, set to observe normal TTL levels, (Ø to 5 volts) and look for a change in logic levels from low to high. If there is no change, check capacitors C23 and C24 for leakage or a direct short, by measuring the resistance across the capacitor. If the resistance is low (approximately 1K or less) replace the capacitors with known good ones and re-check the resistance across the capacitors. Also, compare the resistance from the positive point where you removed the capacitor. If the resistance is higher now than when the capacitor was installed, the capacitor is probably defective. If there is still no change in the signal after replacing the capacitors with known good ones, the sensor is probably defective.

If there is a change in voltage at test points 1Ø and 11, then follow the signals through the corresponding transistor and op amp circuitry to see where the signal does not change. The other suspect capacitors are C49 and C5Ø, which are on the outputs of the op amp. Apply the same procedure given above. Replace defective capacitors with the same value ceramic disk capacitors. These can be ordered through National Parts as:

1ØØØ pF 5ØV +-5% Ceramic Disk Part # CC-1Ø2JJBC Catalog # 26-9999C

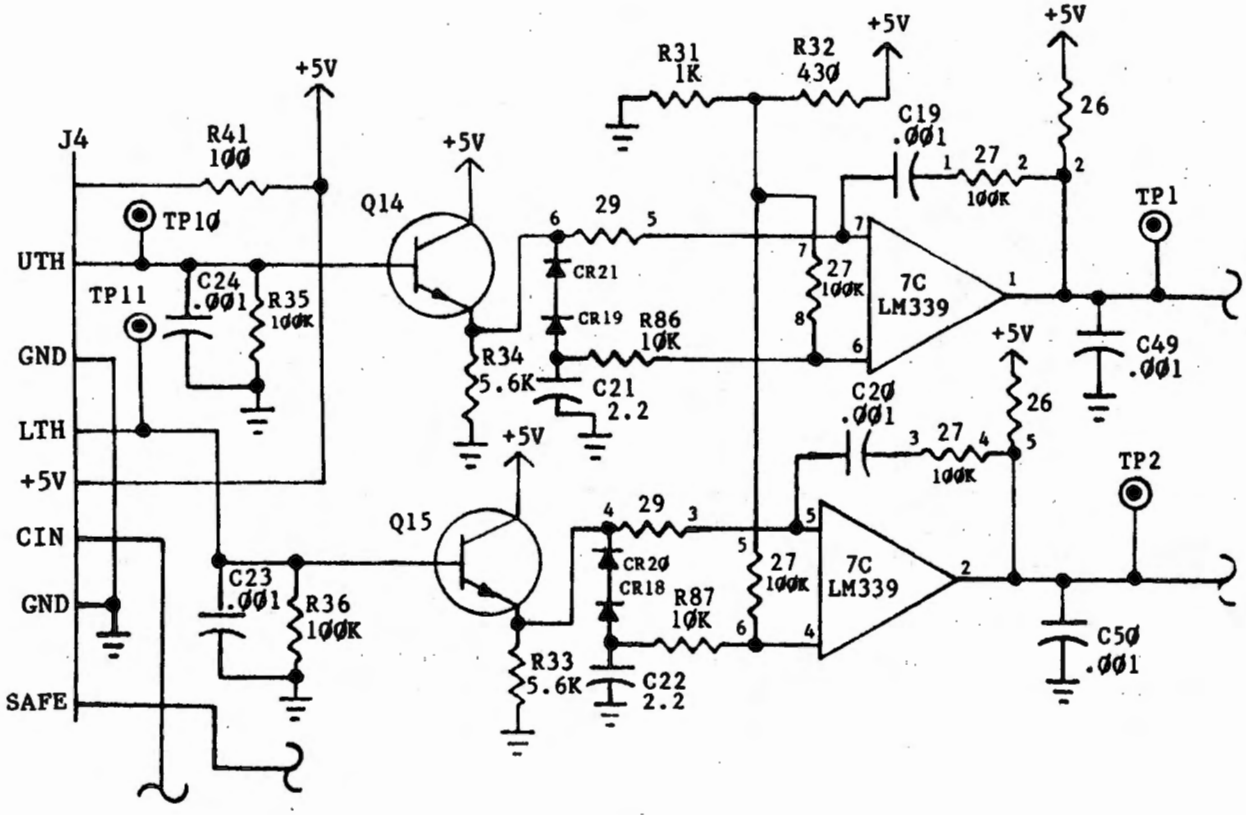

Figure 1

DATE: November 3, 1986

REVISION DATE: November 3, 1986

BULLETIN NO: I/O:11Ø

PRODUCT: 26-1245 1Ø Meg Disk Cartridge System

SUBASSEMBLY: ATA-1Ø83 Astec Power Supply

SUBASSEMBLY REVISION: AC9357

PURPOSE: To correct a problem which may cause the 5 and 12 volt power supply to be low in the 1Ø Meg Disk Cartridge System.

DISCUSSION:

The Astec power supply used in the 1Ø Meg Disk Cartridge System may display low output voltages on both the 5 and 12 volt supply lines. These low voltages may cause intermittent lockups and failures during operation such as random data errors, failure to correctly spin up, and intermittent spin down. These problems may not manifest themselves until the addition of a second drive. To correct this problem, it is necessary to add a parallel resistor to the power supply feedback circuitry.

PROCEDURE:

Note: This modification should only be applied to **Astec** supplies. If the unit has a Boschert supply with low voltages, refer to Technical Bulletin I/O:1Ø4.

1) Measure the +5 and +12 volt supply at the disk cartridge controller board. With the door (or doors if the system has two drives) closed, check to see that the +5 volt supply is between +5.ØØ - +5.2Ø, and the +12 volt supply is between +12.ØØ - +12.25. If the voltages are within this range, open the doors and check to ensure that they do not exceed +5.2Ø and +12.25 volts. If the supply meets these specifications, it does not need modification.

2) If the voltages are too low, add a parallel resistor across R37 or R38. A good starting value is 68k. Measure the output voltages again according to step (1). If the supply meets specifications, reassemble and test the disk cartridge system with both diagnostics and an appropriate operating system. If the supply does not meet the specifications in step (1), note whether it is too high or too low. If the voltages are too low, the parallel resistor value should be reduced. If they are too high, the parallel resistor value should be increased. If it is necessary to use a parallel resistor which is greater than 1ØØk or less than 47k, the supply is probably defective and should be replaced.

3) After ensuring that the voltages are within the correct range, reassemble the unit and test with diagnostics and the appropriate operating system.

 COPYRIGHT © 1987

DATE: January 27, 1987

REVISION DATE: January 27, 1987

BULLETIN NO: I/O:111

PRODUCT: 26-1158 Daisy Wheel II

SUBASSEMBLY: AXX-Ø343 PCB Main

SUBASSEMBLY REVISION: All revisions

PURPOSE: Make DW-II work with some Xenix systems.

DISCUSSION: When using the DW-II (not DW-IIB) with XENIX 3.X (Model 16, 16B and 6ØØØ) and System V (Tandy 3ØØØ) you may experience symptoms from slow printing to printing one character and locking up.

When examined, it was found that pins 1Ø and 13 on the Centronics connector are handled differently on the DW-II than our other printers. Pin 1Ø on most other printers is "ACK*" and pin 13 is "BUSY*". In the DW-II, pin 1Ø is connected to a +5 volt pull up and 13 is a signal called "SELECT". Most of our other printers use an inverted "BUSY" signal to generate "ACK*" and "BUSY*". The following procedure will outline how to reconfigure the DW-II to do this.

PROCEDURE:

1. Remove the power and main logic board combination from the printer, then remove the main control board from the power board by removing the four screws and unplugging it from the power board.

2. Locate CN4 and place the board so that CN4 is to your right and up. On the component side just under CN4 (figure 1) cut the right most trace of the two going from AR1 to the connector CN4.

3. Cut the trace going from between pins 1 and 2 of IC1 and pins 15 and 16 of IC2.

4. Turn the board over keeping CN4 up away from you (figure 2). Now working on the back side of CN4 count from the right to left, on the bottom row find pins 1Ø and 13 and run a jumper between them.

5. Locate IC1 and run a jumper between pins 6 and pin 12.

6. Reassemble the unit and test.

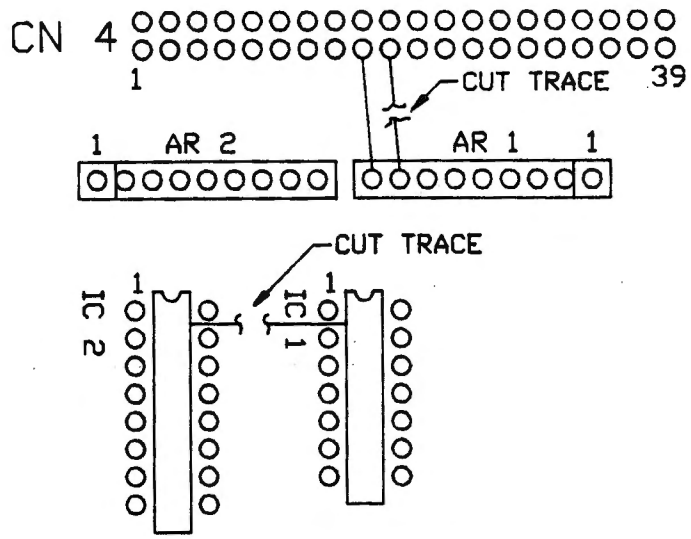

COMPONENT SIDE

Figure 1

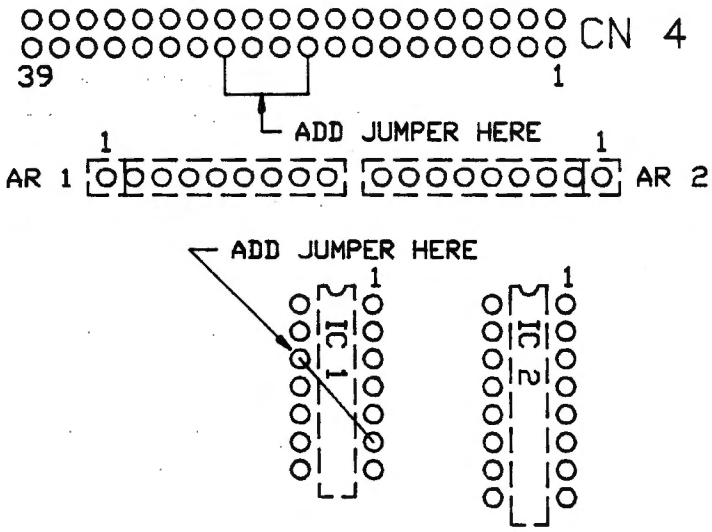

SOLDER SIDE

Figure 2

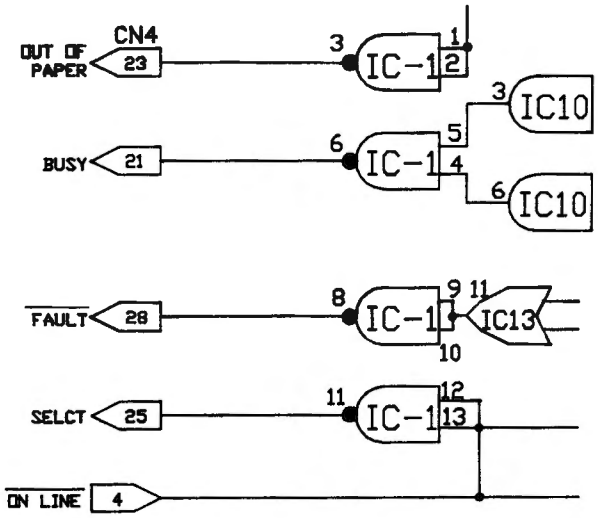

26-1158
Before modification

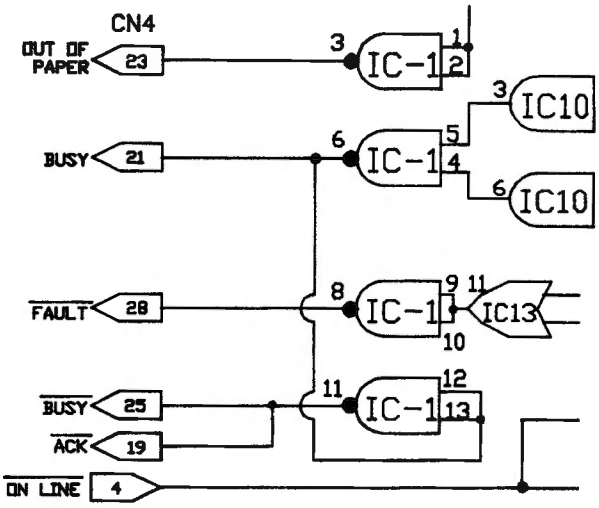

26-1158
After modification

DATE: February 23, 1987

REVISION DATE: February 23, 1987

BULLETIN NO: I/O:112

PRODUCT: 25-1Ø13 12ØØ baud PC modem

SUBASSEMBLY: AX-9Ø45

SUBASSEMBLY REVISION: A11

PURPOSE: To describe switch settings and fuse replacement.

DISCUSSION: The 25-1Ø13 Internal 3ØØ/12ØØ baud modem has a four position dip switch. These determine the mode of operation at power-up. A switch that is closed is marked "on". When the board is installed, note that the lever, when on, is pointed toward the modem PCB. The settings are as folows:

SW1	open	True carrier detect
	closed	Forced carrier detect
SW2	open	auto-answer only (SØ=1)
	closed	originate mode (unless SØ=1 thru software)
SW3	open	Modem uses the COM2 port (2F8-2FF hex, INT3)
	closed	Modem uses the COM1 port (3F8-3FF hex, INT4)
SW4	not used	

There is a fuse to protect U2. This fuse is located at R4 and is the second component up from U2 pin 2Ø. If this fuse is blown, symptoms may include, but are not necessarily limited to, dialing but not connecting or calling but not knowing whether the other end had picked up the phone.

PROCEDURE: Check the fuse at location R4. If it is blown, replace it with a 1Ø ohm 1/4 watt resistor and add a 1N914 switching diode between pin 1 and pin 6 of U2. The cathode goes to pin 1.

These can be ordered under:

Description	National Parts #	Catalog #
1Ø ohm 1/4 watt resistor	N-ØØ63BBC	25-1Ø13
1N914 diode	DX-ØØ1Ø	25-1Ø13

 COPYRIGHT © 1987

DATE: January 26, 1987

REVISION DATE: January 26, 1987

BULLETIN NO: I/O:113

PRODUCT: 26-1158/127Ø Daisy Wheels II and 51Ø

SUBASSEMBLY: AXX-Ø6Ø4 Power Board

SUBASSEMBLY REVISION: All Revisions

PURPOSE: Discuss DW-II and DWP-51Ø power boards.

DISCUSSION:

The power boards for the DW-II and DW-51Ø are now available under only one part number. When ordering one of these boards you will receive one of three. Functionally all three boards are identical. The physical and electrical differences are listed below:

1. Two boards have a fin type heat sink. The third heat sink is flat.
2. One board has transistors mounted to the heat sink with individual screws. Two have the transisitors mounted by a bracket mounted across the face of the transisitor.
3. Two boards have square connector type ground leads. The third has a wire with a ground lug.
4. One board has SEL and SP disable switches, the other two do not.

These differences do not amount to incompatability.

PROCEDURE:

When replacing one board with another check the ground lead attached to the upper right hand corner of the board. If the ground lugs are different, take the lead off of the old board and install it onto the new one.

DATE: March 24, 1987

REVISION DATE: August 14, 1989

BULLETIN NO: I/O:114

PRODUCT: 25-1Ø28 Trackstar Board AX-Ø175
25-1Ø38 Trackstar E Board AX-Ø386

SUBASSEMBLY:

Teac FD54B-Ø2-U	AXX-5Ø51	Teac FD55BV-75-U	AXX-5Ø63
Teac FD55BR-521	AXX-5121	Teac FD55BR-121	AXX-5145
Teac FD55BR-221	AXX-5119	Teac FD55BR-596-U	AXX-5129

SUBASSEMBLY REVISION: All Revisions

PURPOSE: Trackstar and Trackstar E installation procedures.

DISCUSSION: The Trackstar and Trackstar E board are option boards which will allow the Tandy 1ØØØ, 1ØØØA, 1ØØØSX, 1ØØØTX, 1ØØØSL & 1ØØØTL to run Apple II series software. Many Apple packages will run with the basic Trackstar Hardware and Software installation. Some may require installation of FPBASIC from an AppleDOS 3.3 master diskette, and others which use half-track copy protection will require an external Apple drive be installed in order to function. Listed below are the installation procedures for these machines.

The Trackstar E board has some new features which are different from the original Trackstar board.

The first difference is that hard drive use is now supported. Apple programs can now be stored in an MS-DOS environment as a special type of file called a TRACKSTORE file. Refer to the owner's manual for further details on how this new file structure works.

The next difference is that only one internal "Apple ready" disk drive is supported.

The installation procedures for the Trackstar E board will not change, except for the fact that the new board will not require any modifications.

The physical differences between the Trackstar PCB and the Trackstar E PCB is in two PAL ICs. In the middle of the board there are a group of seven PAL ICs, located above connector J4. On the Trackstar PCB, PALs in location U34 and U36 will have their location numbers stamped on the chips, along with the normal manufacturer's number, date code number, etc.. On the Trackstar E PCB, the PAL IC in U34's location will have the number "P23" stamped on it instead of the location number "U34" (along with the normal manufacturer's number and date code, etc.). Additionally, the PAL IC in U36's location, will have the number "P22" stamped on it instead of the location number "U36". Both boards will be handled as "Exchange Boards" from Business Products Parts.

PROCEDURE:

Models 1ØØØ, 1ØØØA, and 1ØØØSX

1. Thoroughly test the Tandy 1ØØØ to insure that it functions properly prior to the upgrade.

2. Remove the floppy drives from the unit and note the TEAC drive number printed on the back of the drive. The drive will be either a FD55BV-75-U, FD55BV-221, FD55BR-521, FD55BR-596-U, FD55BR-121 or a FD54B-Ø2-U drive. It will be necessary to change some components on each of these drives, **with the exception of the FD55BR-121,** in order for it to function with both AppleDOS and MS-DOS. **The FD55BR-121 floppy disk drive requires no changes and should be installed as is.** Locate the drive your machine contains below, and change the components listed for that drive.

TEAC	FD55BV-75-U	Change L4 and L5 from 33Ø uH to 68Ø uH Change C18 and C29 From .ØØ22 uf to .ØØ1 uf
TEAC	FD55BV-221	Change L3 and L5 from 33Ø uH to 68Ø uH Change C12 and C16 from .ØØ22 uf to .ØØ1 uf
TEAC	FD55BR-521	Change L3 and L5 from 33Ø uH to 68Ø uH Change C12 and C16 from .ØØ22 uf to .ØØ1 uf
TEAC	**FD55BR-121**	**Requires no changes be done to the drive board.**
TEAC	FD55BR-596-U	Change L3 and L5 from 33Ø uH to 68Ø uH Change C12 and C16 from .ØØ22 uf to .ØØ1 uf
TEAC	FD-54B-Ø2-U	Change L1 and L2 from 33Ø uH to 68Ø uH Change C3Ø from .ØØ22 uf to .ØØ1 uf

Parts needed may be ordered as:

68Ø uH choke	ACA-1ØØ6	26-3129
.ØØ1 uf cap	CC-1Ø2JJBC	26-9999C

NOTE: After installation of this modification the push on capacitor supplied with the installation kit will NOT need to be installed. Any Trackstar/E machines that come in for repair MUST have the modification outlined here installed and the push on capacitor MUST be removed.

Reinstall the drives leaving the drive cable disconnected from the Main Logic board.

3. Assemble the disk drive adapter cable which comes with the kit as shown in figure 1. Connect the adapter to the Main Logic, drive cable, and to the Trackstar board as shown. Be aware that on the drive cable, pin 1 is not always marked with a stripe.

   Determine the type of monitor to be used (RGB or composite) and install the appropriate cable as shown in figure 2. Plug the Trackstar into the computer and route the cable as shown in figure 2 and plug it into the Tandy 1000 as shown in figure 3. Note that there are two 9 pin DIN connectors on the rear of the Trackstar board and that the monitor will plug into the topmost of these connectors.

4. Reassemble the computer and test the unit as a Tandy 1000. If there are no problems, proceed to test the machine with Apple type software. Each shop has a copy of Diversa-Dos with the Trackstar diagnostics. Follow the instructions with this software.

Be aware when servicing units with Trackstar installed, that the version Tandy is selling (25-1028), is different than the original version marketed by Diamond Computer Systems. The version Tandy sells and maintains parts stock for has incorporated onto the logic board, parts which were initially installed on the drive adapter board. Cabling differences are also present between the two boards. Parts are not interchangeable!

Tandy 1000SL Installation Procedure

The installation procedure for the Tandy 1000SL will be almost the same as for the Model 1000, 1000A, and 1000SX. There are two major differences. The first is that a special adapter cable with holes punched in it will have to be substituted in place of the adapter cable supplied with the Trackstar kit. This cable can be ordered from National Parts as:

Part # WF-0116 Catalog # 25-1028

NOTE: DO NOT USE THE ORIGINAL ADAPTER CABLE SUPPLIED WITH THE TRACKSTAR KIT IN THE TANDY 1000SL. The Tandy 1000SL main logic board floppy disk drive bus supplies power supply voltages which are blocked by holes punched in the existing floppy disk drive cable. If this original adapter cable supplied with the Trackstar kit is installed between the main logic board and the adapter board (also supplied with the Trackstar kit), these power supply voltages would be shorted to ground. This is the reason we need the special adapter cable with holes punched in it.

The second difference is that the Tandy 1000SL must be run in 8 MHz mode in order to load the STAR program correctly. The DOS command 'MODE FAST' will accomplish this. You can also use the SETUPSL program to set the Tandy 1000SL to boot up in either mode as desired.

Tandy 1000TX Installation Procedure

Since the Trackstar does not support a 3.5" disk drive it will be necessary to install a 5.25" unit as drive B. This drive must be modified in the same way it would be in an the Tandy 1000, for example. The cable and adapter board are assembled in a different manner from the other machines so refer to figure 4 to help clarify this difference.

A. Disconnect the drive cable from the 5.25" drive (drive B). The male edge card connector of the drive adapter board will be inserted into this connector.
B. The female header connector on the short cable assembly is connected to the male header on the adapter card.
C. The female edge connector of the short cable is then attached to the male edge connector of the 5.25" drive (drive B).
D. The installation of the long cable that goes from the disk drive adapter card to the Trackstar board does not change.

When used with the Trackstar card, the TX must be operated in the 4.00 MHz mode if 80 character operation is desired. The DOS command 'MODE SLOW' will accomplish this.

Tandy 1ØØØTL Installation Procedure

The Tandy 1ØØØTL will support one 5 1/4" disk drive which can be modified for Trackstar using the same installation procedure as the Tandy 1ØØØTX. Jumper the 5 1/4" disk drive for drive select 1 (B:) and install the Trackstar adapter board and cable between the 5 1/4" floppy disk drive connector and the floppy disk drive card edge connector as shown in figure 4. Then use the program SETUPTL to switch the drive A: designation from the top drive to the bottom drive, which will allow the 5 1/4" drive to act as the A: drive. This will allow the Apple software to work directly back to the 5 1/4" drive as A:.

Like the Tandy 1ØØØTX, the Tandy 1ØØØTL must be operated in the 4.ØØ MHz mode if 8Ø character operation is desired when used with Trackstar. The DOS command 'MODE SLOW' will accomplish this. Also, the SETUPTL program can be used to set the Tandy 1ØØØTL to boot up in either mode as desired.

Additional Modifications for Operation With TEAC 221, 521, & 596 Drives

Some software (the Apple demo for example) may not execute properly in units using the TEAC 221, 521, or 596 drives. The software will attempt to load and run, but will lock up the machine instead. In addition to the modifications to the drive logic board, the following changes will need to be made to the Trackstar board itself, regardless of the computer it is installed in.

These modifications are already present on revision 2.Ø and later boards.

On the component side — Cut the trace between U16 pin 1, and U7 pin 15
Cut the trace between U16 pin 5, and U25 pin 8
(Be certain to cut the trace that goes to the feedthrough next to U25 and not the one that goes to the pullup resistor.)

On the solder side — Cut the trace on **BOTH SIDES** of U15 pin 9

Jumper U16 pin 1, to U25 pin 8
Jumper U25 pin 8, to U15 pin 9
Jumper U16 pin 5, to U12 pin 11
Jumper U23 pin 3 to the feedthrough under U7

Replace resistor RØ2 with a 2.2k 1/4 watt

Refer to figure 5 for the location of these ICs.

Note: Assemble the disk drive adaptor card first.

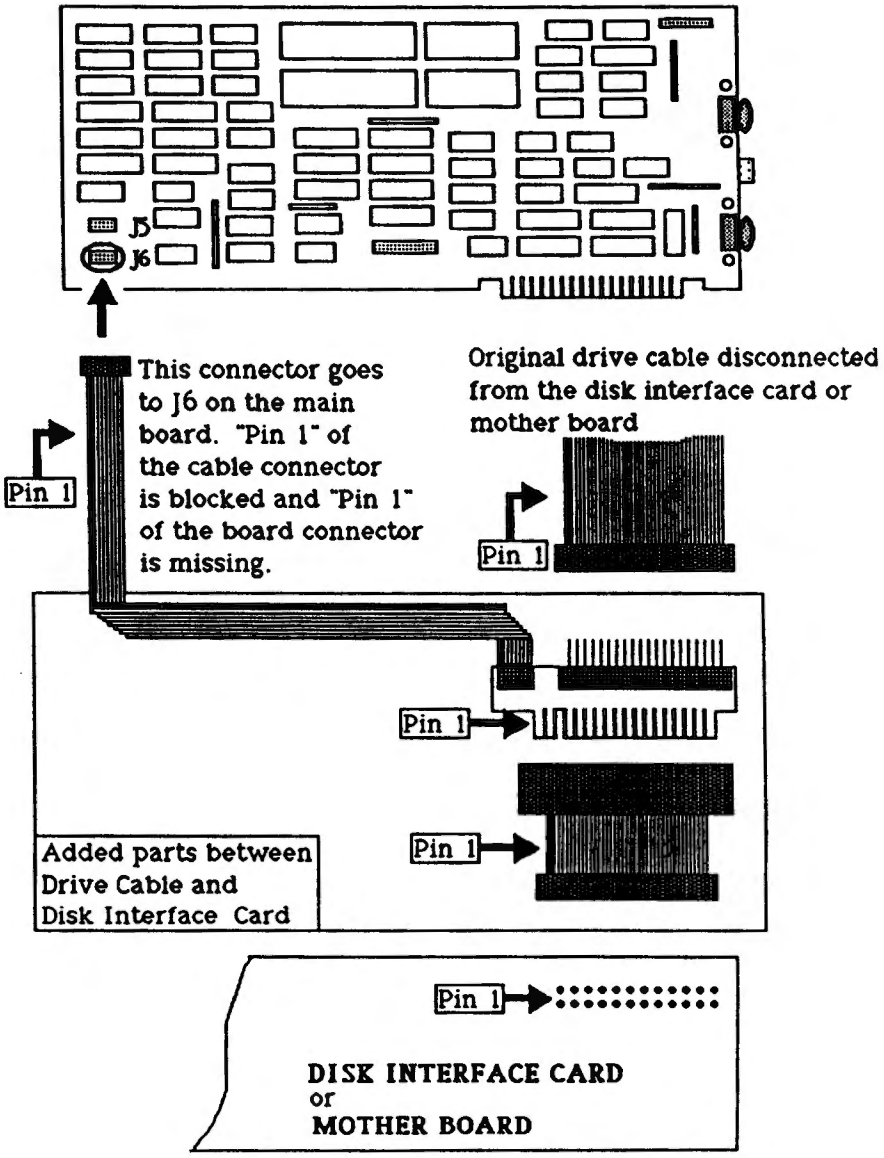

Figure 1

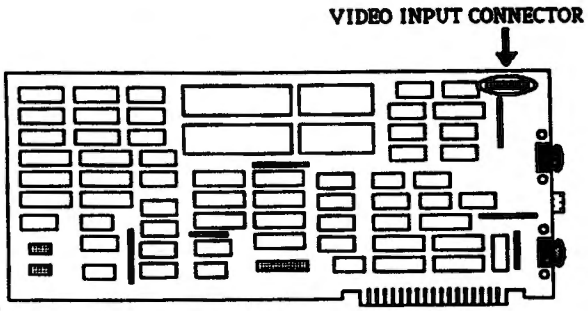

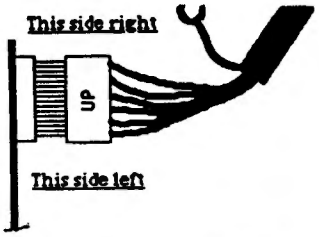

This connection is used when an RGB color monitor or a TTL monochrome monitor is attached. It is important that care be taken with the connector polarization. The female connector has the word "UP" printed on it.

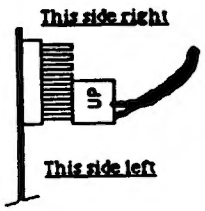

This connection is used when a composite monitor is attached. The left 4 pins of the connector are used.

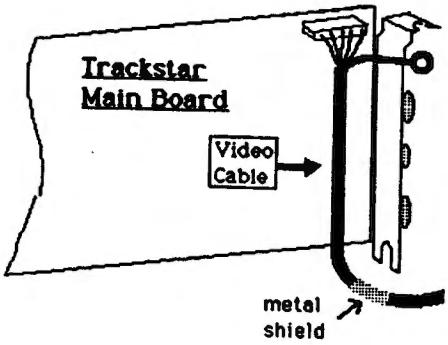

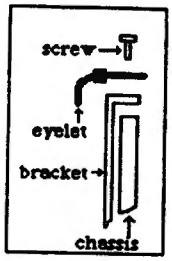

Fig. 1.

Figure 2

Rear View of the Tandy 1000 SX

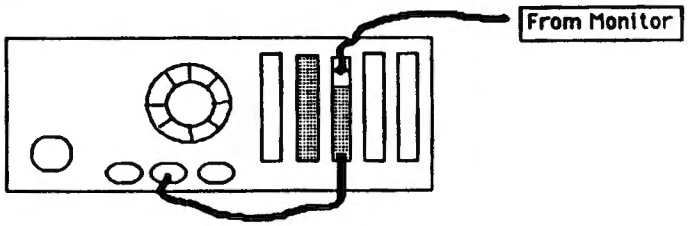

Figure 3

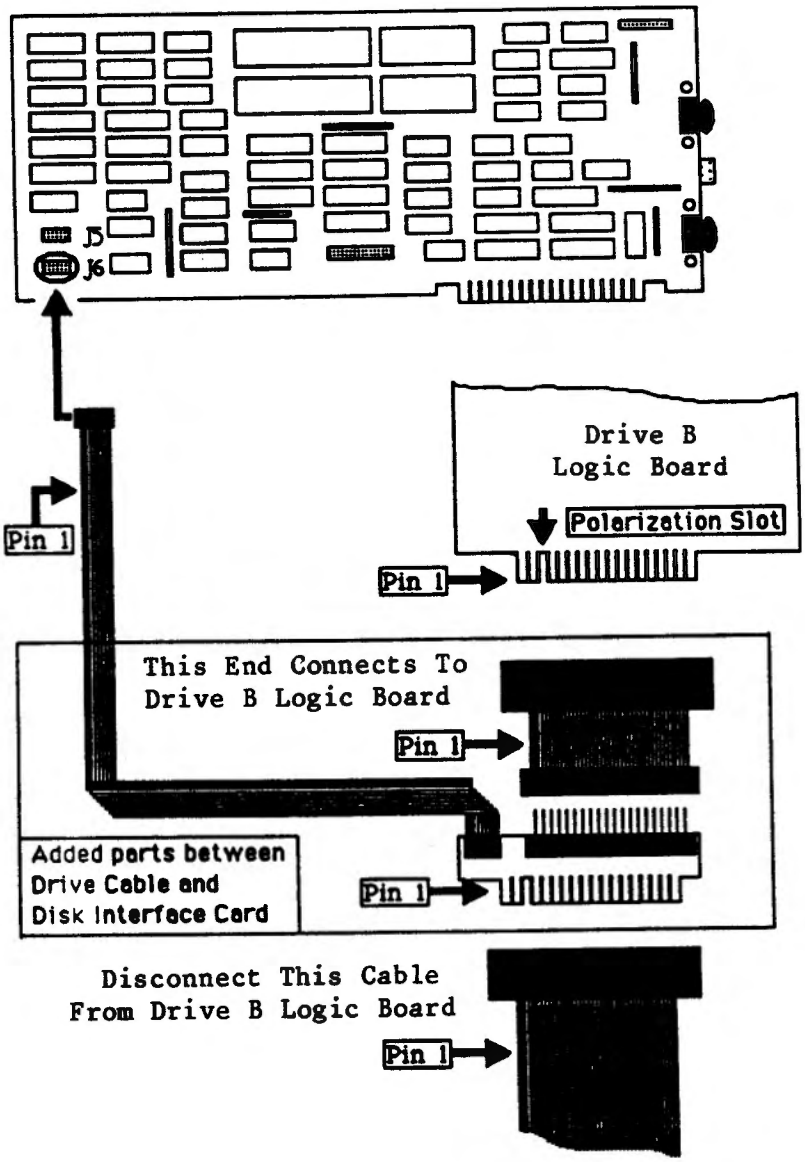
J5
J6
Drive B
Logic Board
Polarization Slot
Pin 1
Pin 1
This End Connects To
Drive B Logic Board
Pin 1
Added parts between
Drive Cable and
Disk Interface Card
Pin 1
Disconnect This Cable
From Drive B Logic Board
Pin 1

Figure 4

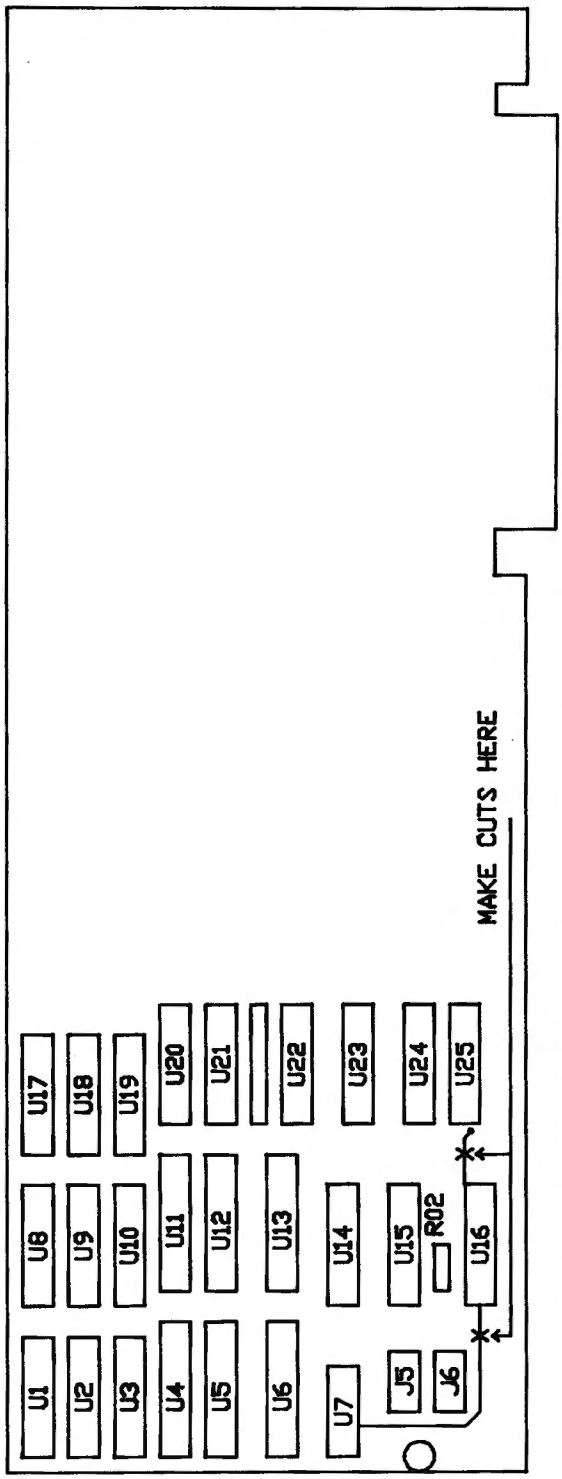
U17
U18
U19
U20
U21
U22
U23
U24
U25
U8
U9
U10
U11
U12
U13
U14
U15
R02
U16
U1
U2
U3
U4
U5
U6
U7
J5
J6
MAKE CUTS HERE

Figure 5

 COPYRIGHT © 1988

TANDY COMPUTER PRODUCTS

OBSELETE

DATE: March 24, 1987

REVISION DATE: February 15, 1988

BULLETIN NO: I/O:114

PRODUCT: 25-1028 Trackstar Board

SUBASSEMBLY: Teac Drives FD-54 (1000) and FD-55 (1000SX)

SUBASSEMBLY REVISION: All Revisions

PURPOSE: Trackstar installation procedures.

DISCUSSION: The Trackstar board is an option board which will allow the Tandy 1000, 1000A, 1000SX, or 1000TX to run Apple II series software. Many Apple packages will run with the basic Trackstar Hardware and Software installation. Some may require installation of FPBASIC from an AppleDOS 3.3 master diskette, and others which use half-track copy protection will require an external Apple drive be installed in order to function. Listed below are the installation procedures for these machines.

PROCEDURE:

Models 1000, 1000A, and 1000SX

1. Thoroughly test the Tandy 1000 to insure that it functions properly prior to the upgrade.

2. Remove the floppy drives from the unit and note the TEAC drive number printed on the back of the drive. The drive will be either a FD55BV-75-U, FD55BV-221, FD55BR-521, FD55BR-596-U, or a FD-54B-02-U drive. It will be necessary to change some components on each of these drives in order for it to function with both AppleDOS and MS-DOS. Locate the drive your machine contains below, and change the components listed for that drive.

TEAC FD55BV-75-U	Change L4 and L5 from 330 uH to 680 uH Change C18 and C29 From .0022 uf to .001 uf
TEAC FD55BV-221	Change L3 and L5 from 330 uH to 680 uH Change C12 and C16 from .0022 uf to .001 uf
TEAC FD55BR-521	Change L3 and L5 from 330 uH to 680 uH Change C12 and C16 from .0022 uf to .001 uf

OBSELETE

TEAC FD55BR-596-U Change L3 and L5 from 33Ø uH to 68Ø uH
Change C12 and C16 from .ØØ22 uf to .ØØ1 uf

TEAC FD-54B-Ø2-U Change L1 and L2 from 33Ø uH to 68Ø uH
Change C3Ø from .ØØ22 uf to .ØØ1 uf

Parts needed may be found as:

68Ø uH choke	ACA-1ØØ6	26-3129
.ØØ1 uf cap	CC1Ø2JJBC	26-9999C

NOTE: After installation of this modification the push on capacitor supplied with the installation kit will NOT need to be installed. Any Trackstar machines that come in for repair MUST have this modification installed and the push on capacitor MUST be removed.

Reinstall the drives leaving the drive cable disconnected from the Main Logic board.

3. Assemble the disk drive adaptor cable which comes with the kit as shown in figure 1. Connect the adaptor to the Main Logic, drive cable, and to the Trackstar board as shown. Be aware that on the drive cable, pin 1 is not always marked with a stripe.

   Determine the type of monitor to be used (RGB or composite) and install the appropriate cable as shown in figure 2. Plug the Trackstar into the computer and route the cable as shown in figure 2 and plug it into the Tandy 1ØØØ as shown in figure 3. Note that there are two 9 pin DIN connectors on the rear of the Trackstar board and that the monitor will plug into the topmost of these connectors.

5. Reassemble the computer and test the unit as a Tandy 1ØØØ. If there are no problems, proceed to test the machine with Apple type software. Each shop has a copy of Diversa-Dos with the Trackstar diagnostics. Follow the instructions with this software.

Be aware when servicing units with Trackstar installed, that the version Tandy is selling (25-1Ø28), is different than the original version marketed by Diamond Computer Systems. The version Tandy sells and maintains parts stock for has incorporated onto the logic board, parts which were initially installed on the drive adaptor board. Cabling differences are also present between the two boards. Parts are not interchangable! Part number for the Radio Shack Trackstar 128 logic board is AX-Ø175.

OBSOLETE

Tandy 1ØØØTX Installation Procedure

Since the Trackstar does not support a 3.5" disk drive it will be necessary to install a 5.25" unit as drive B. This drive must be modified in the same way it would be in an earlier 1ØØØ. The cable and adapter board are assembled in a different manner from the other machines so refer to figure 4 to help clarify this difference.

A. Disconnect the drive cable from the 5.25" drive (drive B). The male edge card connector of the drive adaptor board will be inserted into this connector.
B. The female header connector on the short cable assembly is connected to the male header on the adaptor card.
C. The female edge connector of the short cable is then attached to the male edge connector of the 5.25" drive (drive B).
D. The installation of the long cable that goes from the disk drive adaptor card to the Trackstar board does not change.

When used with the Trackstar card, the TX must be operated in the 4.77 MHz mode if 8Ø character operation is desired. The DOS command 'MODE SLOW' will accomplish this.

Additional Modifications for Operation With TEAC 221, 521, & 596 Drives

Some software (the Apple demo for example) may not execute properly in units using the TEAC 221, 521, or 596 drives. The software will attempt to load and run, but will lock up the machine instead. In addition to the modifications to the drive logic board, the following changes will need to be made to the Trackstar board itself.

These modifications are already present on revision 2.Ø and later boards.

On the component side — Cut the trace between U16 pin 1, and U7 pin 15
Cut the trace between U16 pin 5, and U25 pin 8
(Be certain to cut the trace that goes to the feedthrough next to U25 and not the one that goes to the pullup resistor.)

On the solder side — Cut the trace on **BOTH SIDES** of U15 pin 9

Jumper U16 pin 1, to U25 pin 8
Jumper U25 pin 8, to U15 pin 9
Jumper U16 pin 5, to U12 pin 11
Jumper U23 pin 3 to the feedthrough under U7

Replace resistor RØ2 with a 2.2k 1/4 watt

Refer to figure 5 for the location of these ICs.

OBSELETE

Note: Assemble the disk drive adaptor card first.

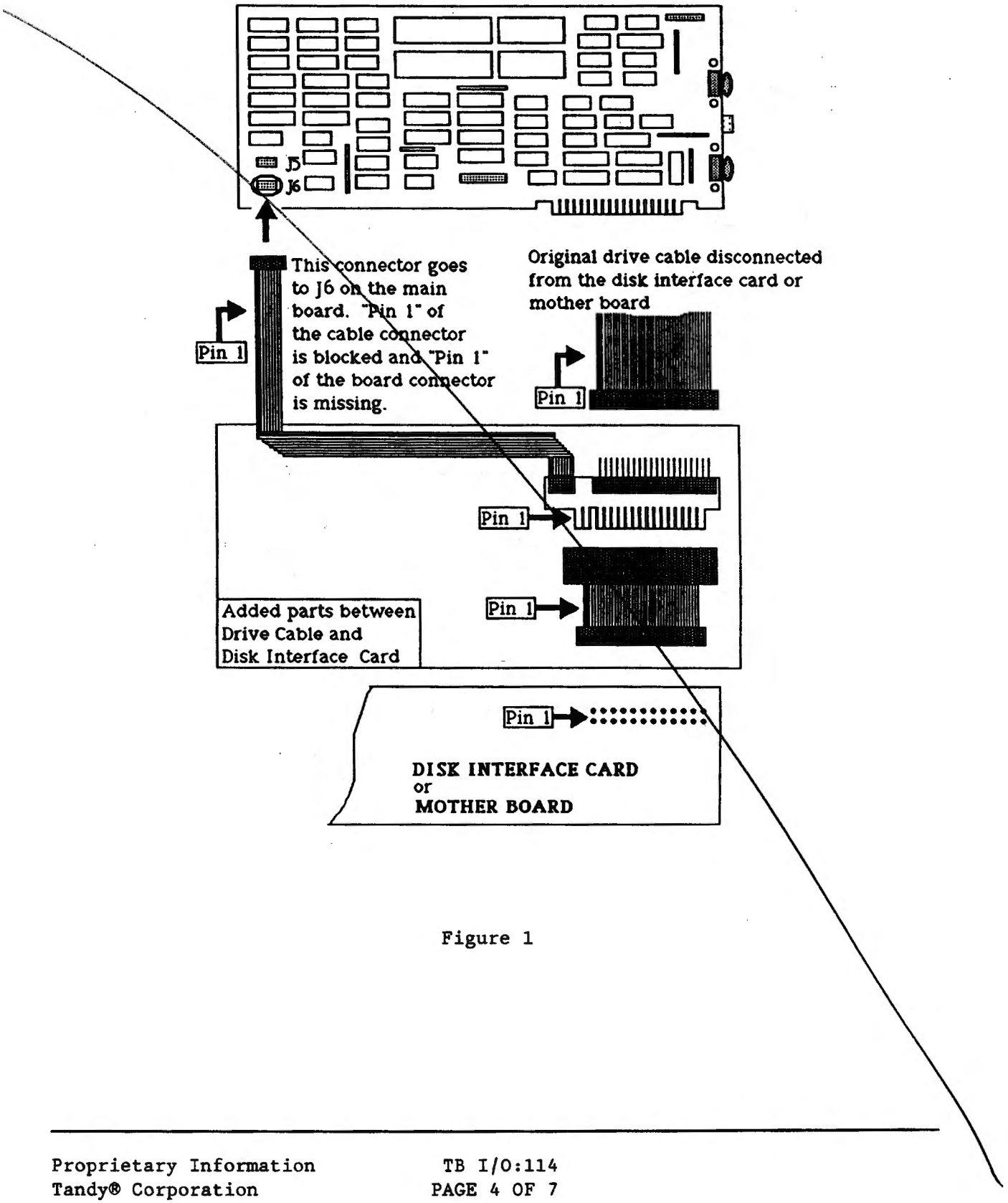

Figure 1

OBSELETE

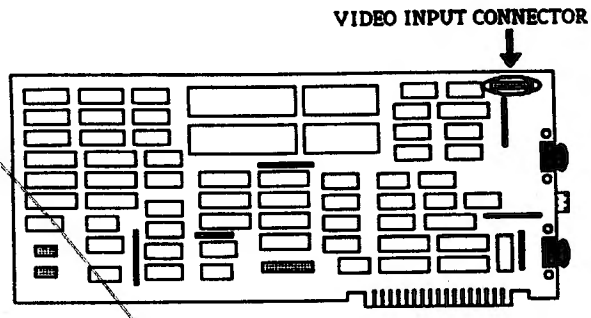

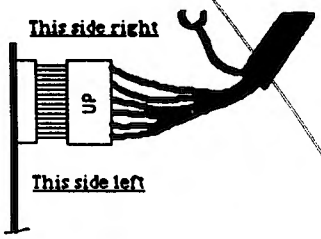

This connection is used when an RGB color monitor or a TTL monochrome monitor is attached. It is important that care be taken with the connector polarization. The female connector has the word "UP" printed on it.

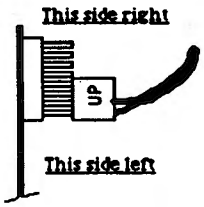

This connection is used when a composite monitor is attached. The left 4 pins of the connector are used.

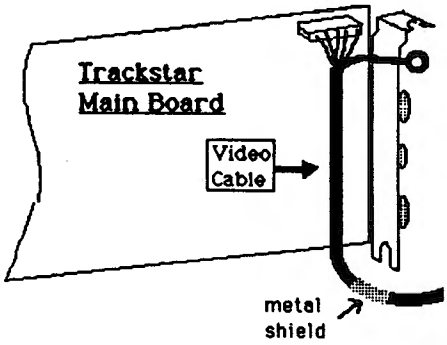

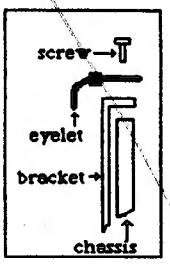

Fig. 1.

Figure 2

Rear View of the Tandy 1000 SX

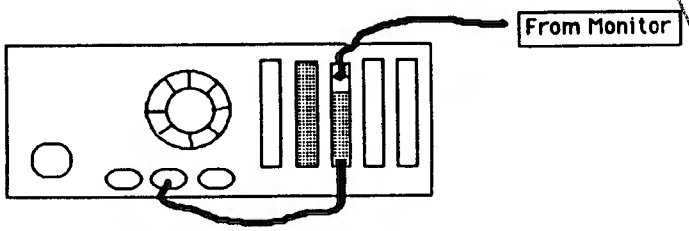

Figure 3

OBSELETE

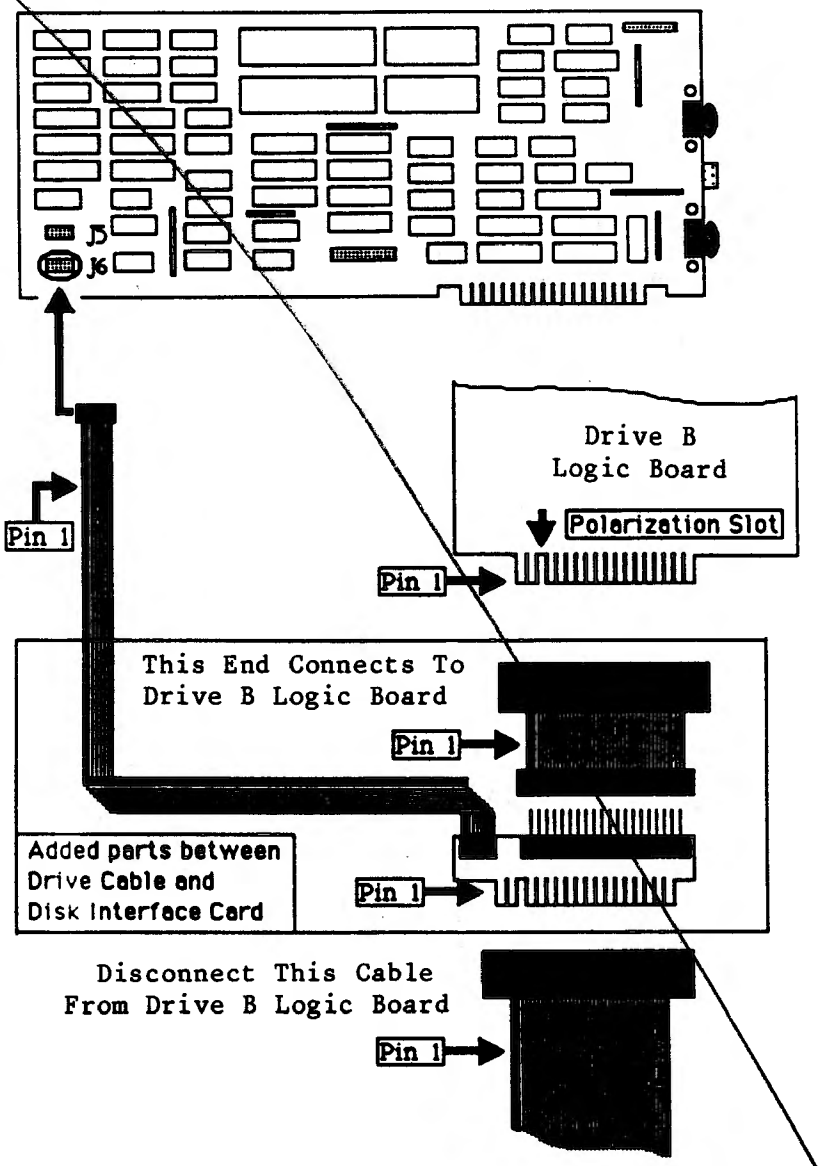

Figure 4

OBSELETE

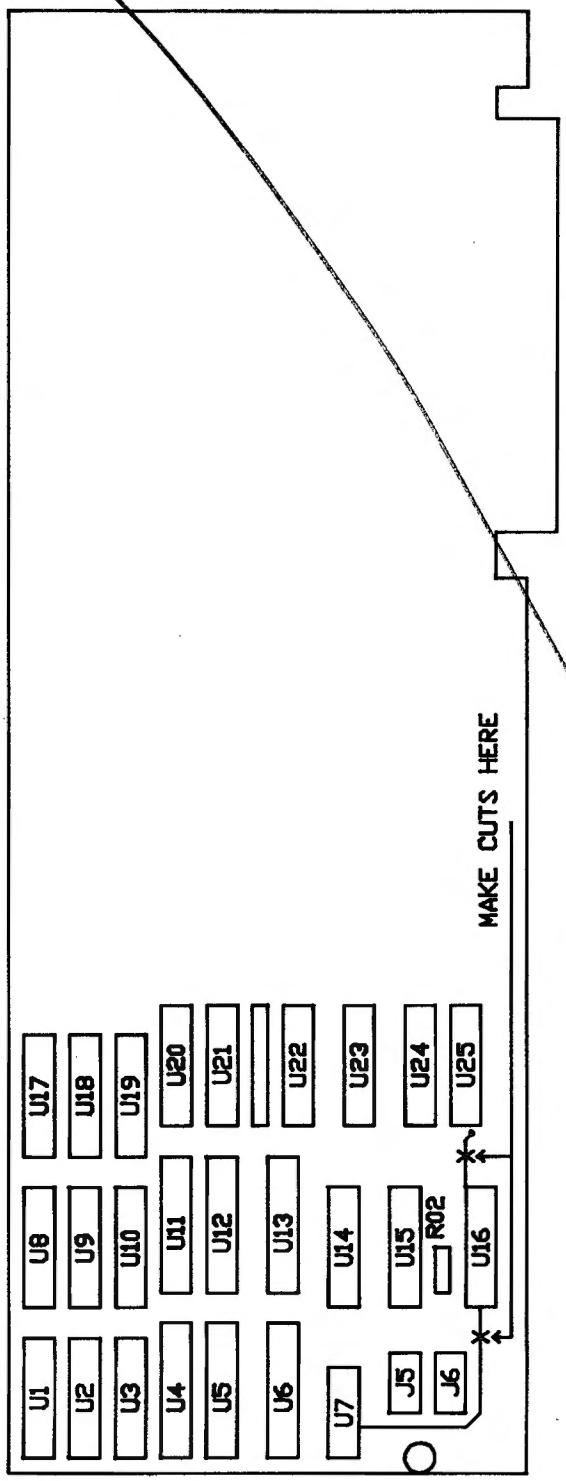

Figure 5

DATE: March 24, 1987

REVISION DATE: November 29, 1988

BULLETIN NO: I/O:114

PRODUCT: 25-1028 Trackstar Board

SUBASSEMBLY: Teac Drives FD-54 (1000) and FD-55 (1000SX)

SUBASSEMBLY REVISION: All Revisions

PURPOSE: Trackstar installation procedures.

DISCUSSION: The Trackstar board is an option board which will allow the Tandy 1000, 1000A, 1000SX, 1000TX, 1000SL & 1000TL to run Apple II series software. Many Apple packages will run with the basic Trackstar Hardware and Software installation. Some may require installation of FPBASIC from an AppleDOS 3.3 master diskette, and others which use half-track copy protection will require an external Apple drive be installed in order to function. Listed below are the installation procedures for these machines.

PROCEDURE:

Models 1000, 1000A, and 1000SX

1. Thoroughly test the Tandy 1000 to insure that it functions properly prior to the upgrade.

2. Remove the floppy drives from the unit and note the TEAC drive number printed on the back of the drive. The drive will be either a FD55BV-75-U, FD55BV-221, FD55BR-521, FD55BR-596-U, or a FD-54B-02-U drive. It will be necessary to change some components on each of these drives in order for it to function with both AppleDOS and MS-DOS. Locate the drive your machine contains below, and change the components listed for that drive.

TEAC FD55BV-75-U	Change L4 and L5 from 330 uH to 680 uH Change C18 and C29 From .0022 uf to .001 uf
TEAC FD55BV-221	Change L3 and L5 from 330 uH to 680 uH Change C12 and C16 from .0022 uf to .001 uf
TEAC FD55BR-521	Change L3 and L5 from 330 uH to 680 uH Change C12 and C16 from .0022 uf to .001 uf

TEAC	FD55BR-596-U	Change L3 and L5 from 33Ø uH to 68Ø uH Change C12 and C16 from .ØØ22 uf to .ØØ1 uf
TEAC	FD-54B-Ø2-U	Change L1 and L2 from 33Ø uH to 68Ø uH Change C3Ø from .ØØ22 uf to .ØØ1 uf

Parts needed may be found as:

68Ø uH choke	ACA-1ØØ6	26-3129
.ØØ1 uf cap	CC1Ø2JJBC	26-9999C

NOTE: After installation of this modification the push on capacitor supplied with the installation kit will NOT need to be installed. Any Trackstar machines that come in for repair MUST have this modification installed and the push on capacitor MUST be removed.

Reinstall the drives leaving the drive cable disconnected from the Main Logic board.

3. Assemble the disk drive adaptor cable which comes with the kit as shown in figure 1. Connect the adaptor to the Main Logic, drive cable, and to the Trackstar board as shown. Be aware that on the drive cable, pin 1 is not always marked with a stripe.

   Determine the type of monitor to be used (RGB or composite) and install the appropriate cable as shown in figure 2. Plug the Trackstar into the computer and route the cable as shown in figure 2 and plug it into the Tandy 1ØØØ as shown in figure 3. Note that there are two 9 pin DIN connectors on the rear of the Trackstar board and that the monitor will plug into the topmost of these connectors.

5. Reassemble the computer and test the unit as a Tandy 1ØØØ. If there are no problems, proceed to test the machine with Apple type software. Each shop has a copy of Diversa-Dos with the Trackstar diagnostics. Follow the instructions with this software.

Be aware when servicing units with Trackstar installed, that the version Tandy is selling (25-1Ø28), is different than the original version marketed by Diamond Computer Systems. The version Tandy sells and maintains parts stock for has incorporated onto the logic board, parts which were initially installed on the drive adaptor board. Cabling differences are also present between the two boards. Parts are not interchangable! Part number for the Radio Shack Trackstar 128 logic board is AX-Ø175.

Tandy 1000SL Installation Procedure

The installation procedure for the Tandy 1000SL will be the same as for the Model 1000, 1000A, and 1000SX. There are two major differences. The first is that a special
adapter cable with holes punched in it will have to be substituted in place of the adapter cable supplied with the Trackstar kit. This cable can be ordered from National Parts as:

Part # WF-0116 Catalog # 25-1028

NOTE: DO NOT USE THE ORIGINAL ADAPTER CABLE SUPPLIED WITH THE TRACKSTAR KIT IN THE TANDY 1000SL. The Tandy 1000SL main logic board floppy disk drive bus supplies power supply voltages which are blocked by holes punched in the existing floppy disk drive cable. If this original adapter cable supplied with the Trackstar kit is installed between the main logic board and the adapter board (also supplied with the Trackstar kit), these power supply voltages would be routed to ground. This is the reason we need the special adapter cable with holes punched in it.

The second difference is that the Tandy 1000SL must be run in 8 MHz mode in order to load the STAR program correctly. The DOS command 'MODE FAST' will accomplish this. You can also use the SETUPSL program to set the Tandy 1000SL to boot up in either mode as desired.

Tandy 1000TX Installation Procedure

Since the Trackstar does not support a 3.5" disk drive it will be necessary to install a 5.25" unit as drive B. This drive must be modified in the same way it would be in an earlier 1000. The cable and adapter board are assembled in a different manner from the other machines so refer to figure 4 to help clarify this difference.

A. Disconnect the drive cable from the 5.25" drive (drive B). The male edge card connector of the drive adaptor board will be inserted into this connector.
B. The female header connector on the short cable assembly is connected to the male header on the adaptor card.
C. The female edge connector of the short cable is then attached to the male edge connector of the 5.25" drive (drive B).
D. The installation of the long cable that goes from the disk drive adaptor card to the Trackstar board does not change.

When used with the Trackstar card, the TX must be operated in the 4.00 MHz mode if 80 character operation is desired. The DOS command 'MODE SLOW' will accomplish this.

Tandy 1ØØØTL Installation Procedure

The Tandy 1ØØØTL will support one 5 1/4" disk drive which can be modified for Trackstar using the same installation procedure as the Tandy 1ØØØTX. Jumper the 5 1/4" disk drive for drive select 1 (B:) and install the Trackstar adapter board and cable between the 5 1/4" floppy disk drive connector and the floppy disk drive card edge connector as shown in figure 4. Then use the program SETUPTL to switch the drive A: designation from the top drive to the bottom drive, which will allow the 5 1/4" drive to act as the A: drive. This will allow the Apple software to work directly back to the 5 1/4" drive as A:.

Like the Tandy 1ØØØTX, the Tandy 1ØØØTL must be operated in the 4.ØØ MHz mode if 8Ø character operation is desired when used with Trackstar. The DOS command 'MODE SLOW' will accomplish this. Also, the SETUPTL program can be used to set the Tandy 1ØØØTL to boot up in either mode as desired.

Additional Modifications for Operation With TEAC 221, 521, & 596 Drives

Some software (the Apple demo for example) may not execute properly in units using the TEAC 221, 521, or 596 drives. The software will attempt to load and run, but will lock up the machine instead. In addition to the modifications to the drive logic board, the following changes will need to be made to the Trackstar board itself, regardless of the computer it is installed in.

These modifications are already present on revision 2.Ø and later boards.

On the component side — Cut the trace between U16 pin 1, and U7 pin 15
Cut the trace between U16 pin 5, and U25 pin 8
(Be certain to cut the trace that goes to the feedthrough next to U25 and not the one that goes to the pullup resistor.)

On the solder side — Cut the trace on **BOTH SIDES** of U15 pin 9

Jumper U16 pin 1, to U25 pin 8
Jumper U25 pin 8, to U15 pin 9
Jumper U16 pin 5, to U12 pin 11
Jumper U23 pin 3 to the feedthrough under U7

Replace resistor RØ2 with a 2.2k 1/4 watt

Refer to figure 5 for the location of these ICs.

Note: Assemble the disk drive adaptor card first.

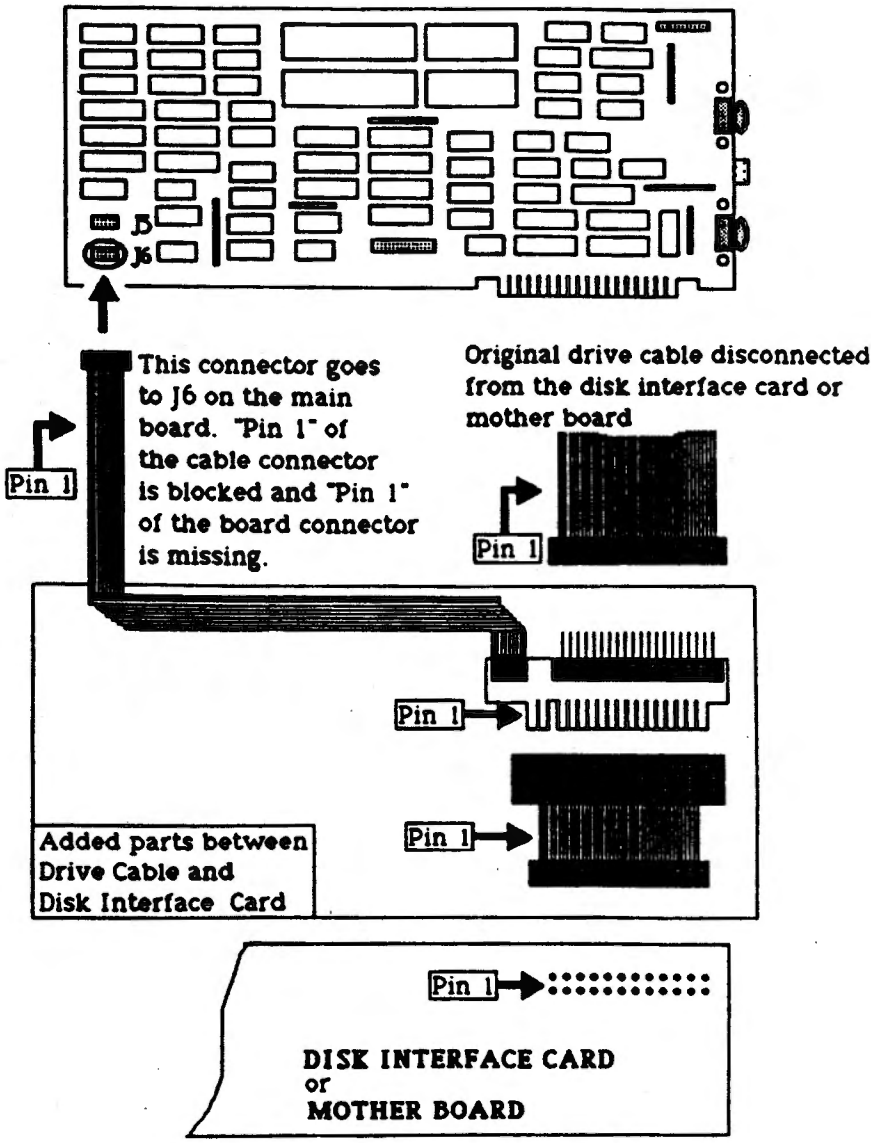

Figure 1

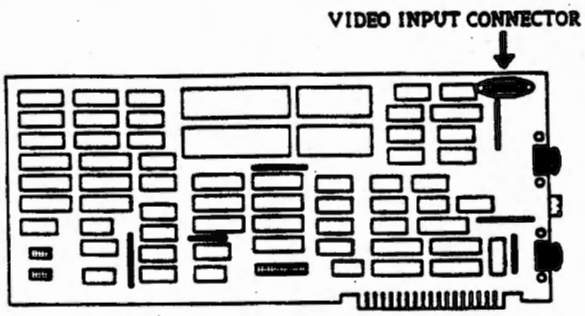

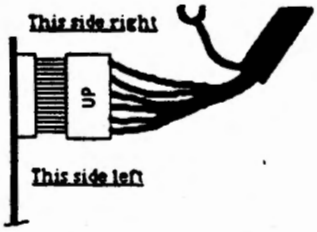

This connection is used when an RGB color monitor or a TTL monochrome monitor is attached. It is important that care be taken with the connector polarization. The female connector has the word "UP" printed on it.

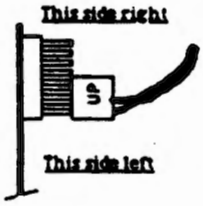

This connection is used when a composite monitor is attached. The left 4 pins of the connector are used.

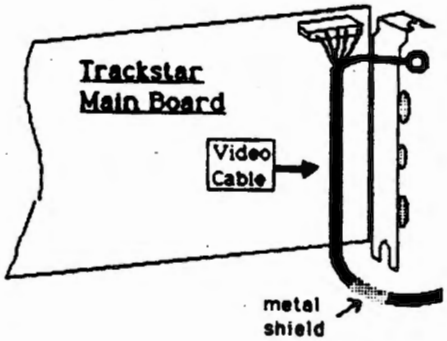

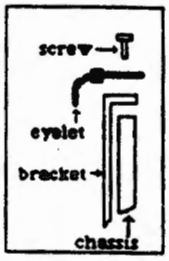

Fig. 1.

Figure 2

Rear View of the Tandy 1000 SX

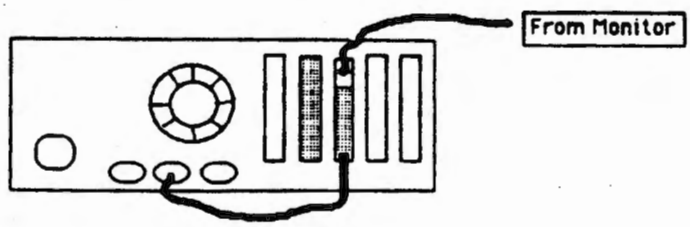

Figure 3

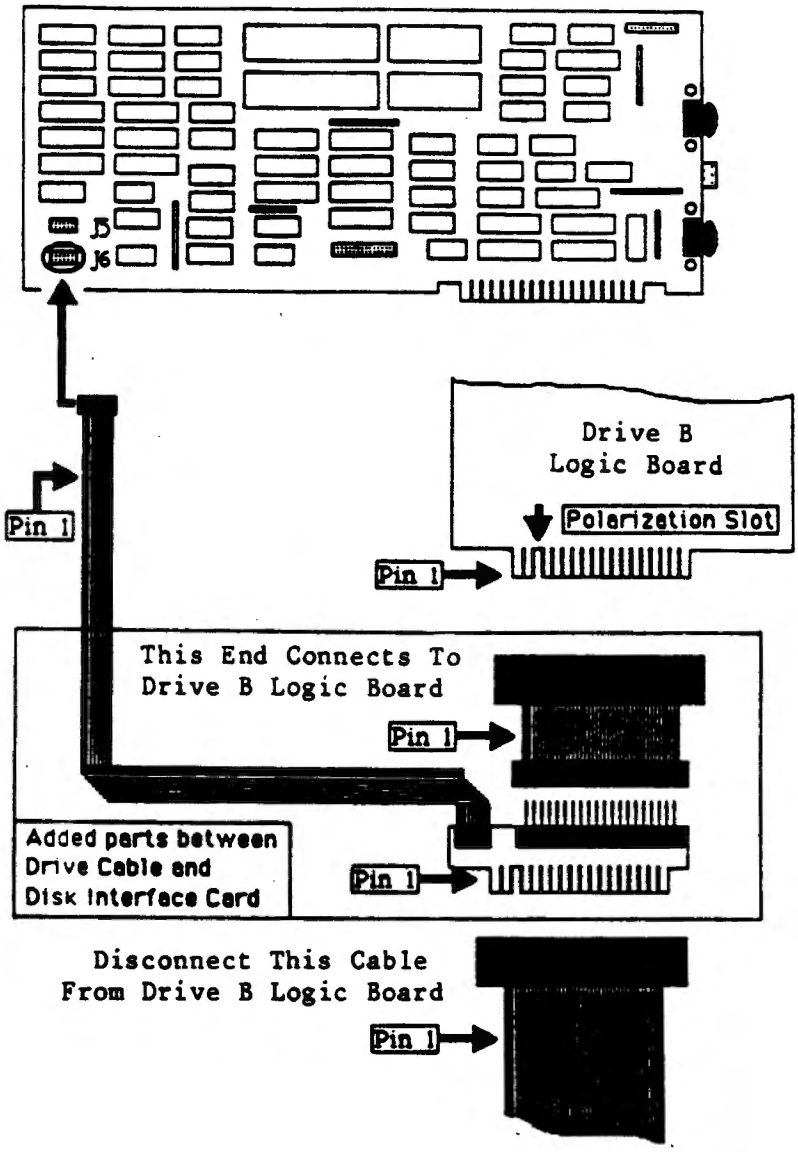
J5
J6
Pin 1
Drive B
Logic Board
Polarization Slot
Pin 1
This End Connects To
Drive B Logic Board
Pin 1
Added parts between
Drive Cable and
Disk Interface Card
Pin 1
Disconnect This Cable
From Drive B Logic Board
Pin 1

Figure 4

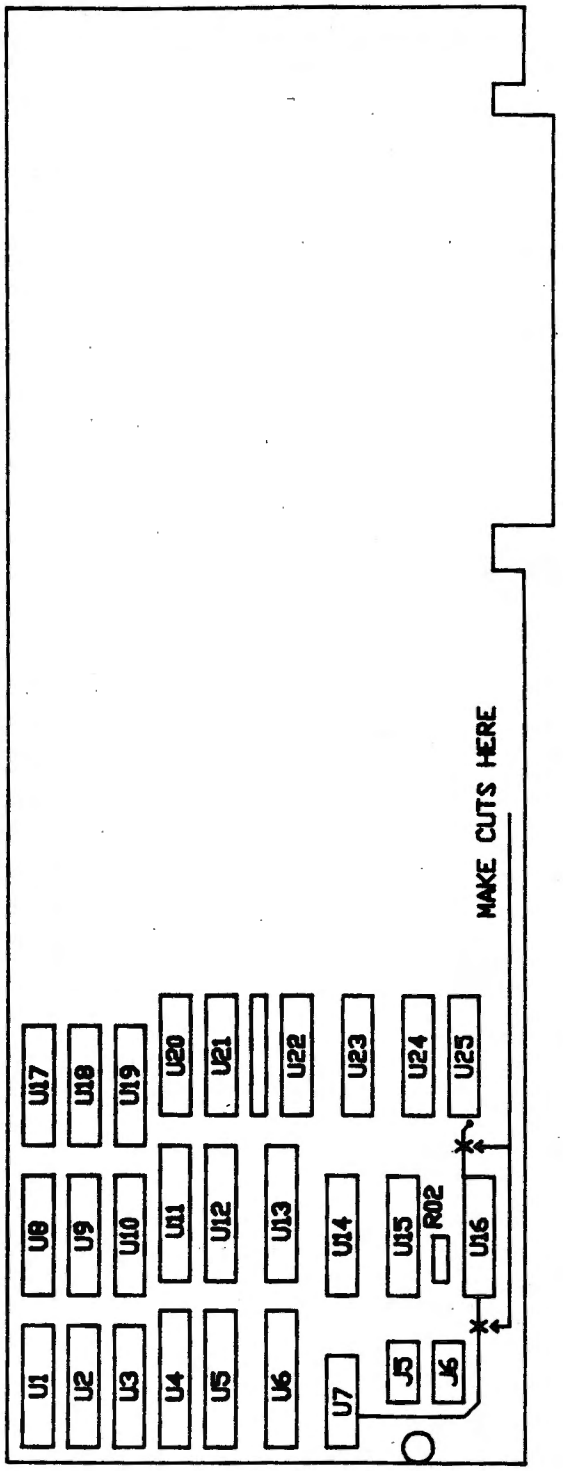
U1
U2
U3
U4
U5
U6
U7
U8
U9
U10
U11
U12
U13
U14
U15
U16
U17
U18
U19
U20
U21
U22
U23
U24
U25
J5
J6
R02
MAKE CUTS HERE

Figure 5

 COPYRIGHT © 1987

TANDY COMPUTER PRODUCTS

DATE: October 13, 1987

REVISION DATE: October 13, 1987

BULLETIN NO: I/O:115

PRODUCT: 25-3Ø46B Deluxe Display Text Adapter

SUBASSEMBLY: None

SUBASSEMBLY REVISION: None

PURPOSE: To correct random dot noise after warm-up.

DISCUSSION: Some units will exhibit a symptom of random dot flicker after being on for several minutes. The problem may be observed over the entire display area, or may be limited to a specific part of the screen. In either case the problem has been determined to be caused by marginal video RAM. In particular, some boards have been found to have RAM with 25Øns access even though the slowest parts specified for this product are 2ØØns. These chips are 2K static RAMS and are located at U19 and U2Ø on the board.

PROCEDURE: Replace the RAMS with 12Øns devices.

Replacement Parts List

Description	RS Part #	RS Catalog #
4Ø16 Static RAM (12Øns)	MX-7355	25-3Ø46

 COPYRIGHT © 1988

TANDY COMPUTER PRODUCTS

DATE: January 13, 1988

REVISION DATE: January 13, 1988

BULLETIN NO: I/O:116

PRODUCT: 26-281Ø DMP211Ø Printer

SUBASSEMBLY: Controller Logic Board (AX-6ØØ1)

SUBASSEMBLY REVISION: All

PURPOSE: To describe a problem caused by improperly set jumpers.

DISCUSSION: Occasionally this printer will fail to work after replacement of the main logic board. If this happens, be certain to check the setting of the jumpers detailed in this bulletin. In particular jumper PJ41 must have pins 1 & 2 shorted. If pins 3 & 4 are jumpered the unit will appear dead. If pins 5 & 6 are jumpered the printer will initialize, but will not print. Other jumpers on the board to check are PJ4Ø (pins 2 & 3 jumpered), JP2-JP3, and JP5-JP6.

PROCEDURE: Check these jumpers and adjust accordingly.

PJ4Ø pins 2 & 3
PJ41 pins 1 & 2

JP2-JP3
JP5-JP6

DATE: February 17, 1988

REVISION DATE: February 17, 1988

BULLETIN NO: I/O:117

PRODUCT: 26-28Ø4 LP1ØØØ Laser Printer

SUBASSEMBLY: OPC Magazine (AXX-7136/7)

SUBASSEMBLY REVISION: Early Production

PURPOSE: To eliminate scraping noise caused by the cleaning blade.

DISCUSSION: Inside the OPC magazine is a cleaning blade which touches the surface of the OPC drum as it rotates. This action provides a method for cleaning left over toner off the drum surface before it rotates past the main charger to begin the printing process again. In early versions of the magazine this blade vibrates at a frequency of 35Ø Hz. The vibration can be caused by several things including:

1) Irregular surface features of the OPC drum.
2) Sharp changes in the speed of rotation of the drum.
3) Vibration of the entire OPC magazine.
4) The contact angle of the cleaning blade to the drum surface.
5) The length of the cleaning blade.
6) The amount of toner between the drum surface and the blade.

This vibration can be heard as a grinding or scraping noise. One solution implemented by the vendor is to dampen the motion of the blade. This does not prevent vibration from occuring, but will make it inaudible. In subsequent production the vendor will also redesign the OPC magazine itself to improve its workings.

PROCEDURE: If a printer exhibits this problem replace the OPC magazine with one of the same type that is already present in the machine. The Kit A unit can be identified by a plastic projection on the rear of the assembly. The Kit B unit will have this projection removed. Refer to the figure on page 2. Do not replace Kit A with Kit B unless the printer indicates a need to do so. All kits (both in National Parts and TEW) have been modified for this fix.

The following Radio Shack part numbers apply to this bulletin:

1) AXX-7136 Kit A (includes Kit A magazine **without the OPC drum)**
   Note: This is not the same Kit A as stocked at TEW

2) AXX-7137 Kit B (includes Kit B magazine cleaning unit only)

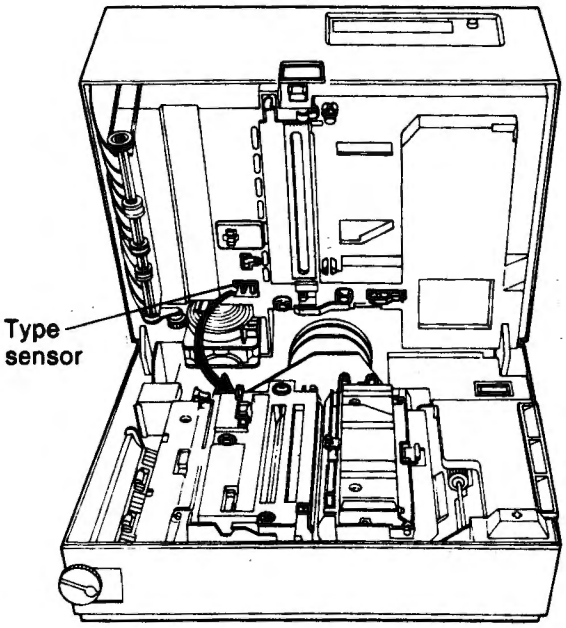

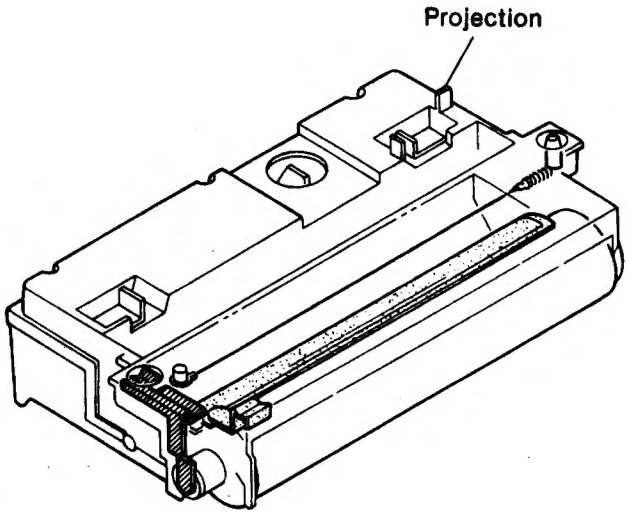

Cleaning unit, OPC drum
(OPC Magazine)

 COPYRIGHT © 1988

TANDY COMPUTER PRODUCTS

DATE: March 18, 1988

REVISION DATE: March 18, 1988

BULLETIN NO: I/O:118

PRODUCT:

26-25Ø	BPS-25Ø
26-1189	BPS-4ØØ
26-1189A	BPS-4ØØA

SUBASSEMBLY: N/A

SUBASSEMBLY REVISION: N/A

PURPOSE: To warn of a possible shock hazard when the backup power supplies are in inverter mode.

DISCUSSION:

The BPS-25Ø and BPS-4ØØ series of backup supplies are designed to provide backup AC power in the event of a power outage. Normally, these supplies are plugged into the AC socket in the wall and when the socket stops providing power, the unit supplies AC power from the inverter inside. A problem exists when the AC cord is removed from the wall outlet to simulate a power failure. There can be as much as 6Ø volts available at the bare contacts of the plug.

*******COMPLIANCE WITH THIS BULLETIN IS MANDATORY*******

PROCEDURE:

1. Never remove the the line cord plug from the wall outlet with the backup supply in the ON position. If it is necessary to remove power to simulate a power failure, plug the backup supply into a power strip with a switch and use the switch to remove AC power.

2. On every backup power supply (26-25Ø, 26-1189, 26-1189A) that comes into the shop, place a SHOCK HAZARD warning sticker on the AC line cord approximately 6 inches from the plug.

3. If the unit is a BPS-25Ø, provide the customer with a new owners manual in addition to the warning sticker.

The stickers and service manual are available under:

Description	Part#	Catalog#
BPS-25Ø sticker	HM-ØØ22	26-25Ø
BPS-25Ø manual	MU26Ø-Ø25Ø	26-25Ø

 COPYRIGHT © 1988

DATE: March 24, 1988

REVISION DATE: March 24, 1988

BULLETIN NO: I/O:119

PRODUCT: 26-28Ø4 Laser Printer

SUBASSEMBLY: Engine Driver

SUBASSEMBLY REVISION: All

PURPOSE: Describe procedure to adjust the fusing temperature.

DISCUSSION:

The fusing section of the Laser printer consists of two heated pressure rollers. Its objective is to fuse the toner, which has been deposited by the drum, into the paper. Should the toner not get properly fused into the paper then it will smear and smudge very easily.

The proper temperature for the fusing roller is generated by a lamp mounted through the center of the roller. The output of a temperature sensor is compared with a reference voltage to maintain the proper temperature on the surface of the roller. The alignment procedure below will correctly set the reference voltage so that a temperature of 163°C (325°F) is maintained within 4 degrees.

PROCEDURE:

In step 7 of this procedure you will have to do some math calculations. It would be wise to have a calculator handy.

1. Unplug the laser printer from all AC sources.

2. Remove the two screws which hold the plate over the video input jack on the back of the unit, and the four screws holding the top case on. Two are on the back and two under the front edge of the top case (see figures 1 & 2). Remove the top case and set it aside.

Figure 1

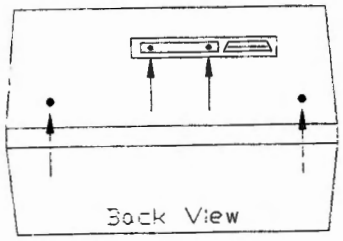

Figure 2

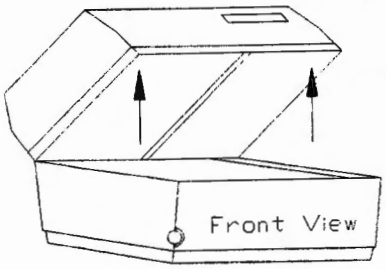

3. Loosen the screws which hold the shield covering the engine driver and Controller boards. Remove the shield and set aside.

4. Remove the three screws which hold the interlock cover in place. Position the interlock tool such as to hold down the interlock switch plunger (see figure 3).

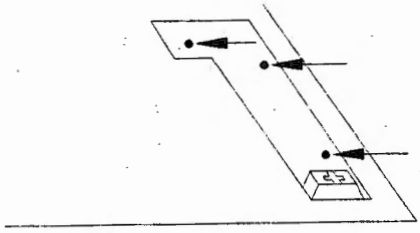

Figure 3

5. Close the top cover, apply AC to the laser printer and turn the power switch on. The unit's motors will run for awhile and then stop. IF they do not run check the interlock switch, the AC cord, and the power switch.

********** STOP **********

Wait 5 minutes for the printer to warm up before continuing to step 6. If you do not wait then the measurements you will make in these steps will be inaccurate.

6. Using a digital voltmeter, measure the AVcc voltage on the engine driver board.

   a. If IC9 on your board is a flat pack with spider-like legs attaching it to the socket, measure from IC9 pin 43 (AVcc) to IC9 pin 33 (GND).

   b. If IC9 is a flat silicon wafer with an EPROM plugged into its top then measure the voltage across C15.

7. Enter the voltage measured in step 6 into the following formula in place of "AVcc". Calculate the adjustment voltages (Vmax and Vmin), to be used later.

   Vmax = AVcc x Ø.422
   Vmin = AVcc x Ø.418

   For example if your AVcc is 5.Ø1 then Vmax is 2.11 volts, and Vmin is 2.Ø9 volts.

8. Using the <u>same</u> digital voltmeter, measure the voltage from TP-1 to Ground. Use the same ground point that you used in step 6.

9. Adjust VR3 so that the voltage at TP-1 is between Vmax and Vmin.

1Ø. Turn the power switch off, remove the AC cord and re-assemble the unit.

11. Test the unit by holding the "ON LINE" button while applying power. All of the segments in the display will light and the printer will print a self-test sheet.

 COPYRIGHT © 1988

TANDY COMPUTER PRODUCTS

DATE: May 16, 1988

REVISION DATE: May 16, 1988

BULLETIN NO: IO:12Ø

PRODUCT: RS-232C Plus Board (25-1Ø31)
Plus Upgrade Adapter Board (25-1Ø16)

SUBASSEMBLY: NONE

SUBASSEMBLY REVISION: NONE

PURPOSE: To provide installation information for the RS-232C Plus Board.

DISCUSSION: The RS-232C Plus board was designed to be connected to the expansion bus of a Tandy MSDOS computer using a header connector. Using the Plus Upgrade Adapter Board, the RS-232C Board can be installed into a Tandy MSDOS computer using the standard card edge connector. When attaching the RS-232C Board to the Plus Upgrade Adapter Board, a back plate is used to secure the board into the computer. This requires removing the hex screws holding the DB-25 connector to the PCB, installing the backplate then replacing the screws to the DB-25 connector. On some boards, the DB-25 connector screws may be a too short for proper thread engagement and will allow the back plate to be pulled loose.

PROCEDURE: If after installing the back plate on the RS-232C Board the DB-25 connector screws are too short for proper thread engagement, replace the old screws with new longer screws. The longer screws are available from National Parts.

Part number	Catalog number
25-1Ø31	HD-Ø354

 COPYRIGHT © 1988

TANDY COMPUTER PRODUCTS

SEE ALSO TB INF:15

DATE:	June 14, 1988	
REVISION DATE:	June 14, 1988	
BULLETIN NO:	I/O:121	
PRODUCT:	25-1Ø13	12ØØ Baud PC Modem
SUBASSEMBLY:	AX-9Ø45	12ØØ Baud PC Modem PCB
SUBASSEMBLY REVISION:	All	

PURPOSE: To alleviate problems in the Tandy 4ØØØ/SCO Xenix 386 environment which may be caused by interrupts from the RI input to the ACE.

DISCUSSION:

Certain 25-1Ø13 12ØØ baud PC modems may cause problems when used in the Tandy 4ØØØ with the SCO Xenix 386 operating system. This software has difficulty in handling interrupts which are generated by the RI (Ring Indicator) input to the 825Ø ACE (Asynchronous Communications Element) on the modem. To solve this problem, it is necessary to disconnect the RI pin on the 825Ø ACE from the circuit and tie it to +5V. This modification is in place on the 25-1Ø13C 12ØØ baud PC modem; only the earlier version 25-1Ø13 boards should show evidence of this problem and are the only boards which may need this modification.

** **Implement This Change On Customer Request Only** **

PROCEDURE:

(1) Locate the 825Ø ACE on the PCB. On early versions of the modem, this will be located at U1Ø.

(2) If the 825Ø is soldered to the board, cut pin 39 of the IC flush with the PCB so that it may be reconnected if necessary and bend the pin upward. If the 825Ø is socketed, remove the IC from its socket, bend pin 39 upward, and replace the IC.

(3) Solder a 1k, 1/4w, 5% resistor between the bent-up pin 39, and pin 4Ø of the 825Ø (+5V).

After the modification is complete, test the modem with appropriate software and diagnostics. You should observe no change in normal modem operation after this modification. The resistor for this modification is a common part and should be obtained locally.

 COPYRIGHT © 1988

TANDY COMPUTER PRODUCTS

DATE: June 29, 1988

REVISION DATE: June 29, 1988

BULLETIN NO: I/O:122

PRODUCT: 26-28ØØ DWP-52Ø Daisy Wheel Printer

SUBASSEMBLY: All

SUBASSEMBLY REVISION: All

PURPOSE: To prevent possible margin and spacing errors.

DISCUSSION:

The space motor used to move the carriage assembly in the DWP-52Ø Daisy Wheel Printer consists of a stepper motor with a gear that has been press fit directly onto the motor shaft. This configuration may cause the gear to work loose with heavy useage of the printer, resulting in either spacing or margin errors during printing. To correct this, a new motor which has the gear assembled onto a collar and the collar then attached to the space motor shaft with set-screws must be installed.

PROCEDURE:

If the printer exibits this problem replace the space motor with the new style model that has the gear attached to a collar and the collar set-screwed onto the motor shaft. This part is available as:

Part Number	Catalog Number
AMM-1ØØØ	**26-28ØØ**

TANDY COMPUTER PRODUCTS

DATE: June 29, 1988

REVISION DATE: June 29, 1988

BULLETIN NO: I/O:123

PRODUCT: 25-4Ø64 DCS BETA2Ø MASTER DRIVE
25-4Ø64A DCS BETA2ØI MASTER DRIVE
25-4Ø81 PC2B DISK CARTRIDGE INTERFACE

SUBASSEMBLY: AX-Ø1Ø6 PCB

SUBASSEMBLY REVISION: N/A

PURPOSE: To make the DCS bootable when using 3.3Ø MS-DOS or when the DCS is installed in a Tandy 4ØØØ.

DISCUSSION: The disk cartridge interface board (AX-Ø1Ø6) has a BIOS ROM on the board. This ROM is responsible for initializing the host computer so that it thinks the DCS is a hard drive. This is what makes the DCS a bootable device. The earler version ROMS will not boot properly with 3.3Ø MS-DOS. Only the 4.48 BIOS ROM will boot properly with 3.3Ø DOS.

The first revision available was the 4.4A ROM and had a version 4.4A DCS UTILITIES disk to go with it. Only the very early DCS drives were ever equipped with this ROM. Later, the 4.41 BIOS ROM and the 4.41 DCS UTILITIES were released. The 4.41 DCS UTILITIES would work with the older version ROM and in all of our products available at the time.

When the Tandy 4ØØØ was introduced, the 4.41 version of utilities and ROM would not recognize the drives properly. About that time, the 25-4Ø64A disk cartridge drive was developed. This drive had the controller board built into the the drive logic board. This made it easier to fit into the drive tower and came equipped with a BIOS ROM version 4.48 and a DCS UTILITIES version 4.48. The 4.48 BIOS ROM and utilities corrected the problems in the Tandy 4ØØØ and 3.3Ø DOS.

The 4.48 BIOS ROMS and 4.48 DCS UTILITIES must be used together!

PROCEDURE: If you have a Tandy 4ØØØ or a BETA2ØI drive, verify that the AX-Ø1Ø6 interface card has 4.48 BIOS ROM at location U4. If there is, check the version of DCS utilities. The TANDY.SYS driver program should be 12682 bytes long, have a date of Ø2-Ø1-88, and report version 4.48 on bootup. The chart below lists the acceptable combinations.

ROM	CHECKSUM	SOFTWARE	USAGE
4.4A	65ØØ	4.4A	Not for 3.3Ø DOS, rarely found
4.4A	65ØØ	4.41	Do not use
4.41	3EØØ	4.4A	Do not use
4.41	3EØØ	4.41	Ok, except 4ØØØ, 4Ø64A's, or 3.3Ø DOS
4.41	3EØØ	4.48	Do not use
4.48	A4ØØ	4.48	Best choice

Included is a list of boards on exchange to help identify each board.

AXX-5112	25-4Ø64	BETA2Ø master (needs controller board)
AXX-5117	25-4Ø65	BETA2Ø slave sub-PC boards missing
AXX-5132	25-4Ø64A	BETA2ØI master has PLCC chips instead of sub-pc boards because the controller is built-in.
AX-Ø1Ø6	25-4Ø81	PC2B5Ø interface board with the BIOS ROM
AX-Ø173	25-4Ø64	Controller board for BETA2Ø master

The 4.48 BIOS ROM and the 4.48 DCS UTILITIES are available as a kit under:

Part #	Catalog #
AXX-7145	25-4Ø64A

Gary K. SAID A300 Roms
Are OK AND Could be In The
KiT INSTead of The A400
Rom.

 COPYRIGHT © 1988

TANDY COMPUTER PRODUCTS

OBSELETE

DATE:	July 12, 1988	
REVISION DATE:	July 12, 1988	
BULLETIN NO:	I/O:124	
PRODUCT:	26-125Ø/A	DWP41Ø
SUBASSEMBLY:	AX-9276	Logic board
	AX-9361	Logic board
SUBASSEMBLY REVISION:	A11	

PURPOSE: To clarify the identification and interchangability of the logic boards for the DWP41Ø.

DISCUSSION/PROCEDURE:

There are two different logic boards used in the 26-125Ø and 26-125ØA DWP41Ø printers. These logic boards are **not** universally exchangable. In order to verify that a correct replacement board is being installed in a DWP41Ø, the following information should be used:

For use in a 26-125Ø DWP41Ø:

Use **only** the AX-9276 logic board. This board may be identified by the markings on IC4 and IC13:

AX-9276 logic board

IC4: labelled 87476814
IC13: labelled 87476822

For use in a 26-125ØA DWP41Ø:

Use **only** the AX-9361 logic board. This board may be identified by the markings on IC4 and IC13:

AX-9361 logic board

IC4: labelled 87476828
IC13: labelled 87476829

 COPYRIGHT © 1988

DATE:	July 12, 1988	
REVISION DATE:	August 3, 1988	
BULLETIN NO:	I/O:124	
PRODUCT:	26-125Ø/A	DWP41Ø
SUBASSEMBLY:	AX-9276 AX-9361	Logic board Logic board
SUBASSEMBLY REVISION:	All	

PURPOSE: To clarify the identification and interchangability of the logic boards for the DWP41Ø.

DISCUSSION/PROCEDURE:

There are two different logic boards used in the 26-125Ø and 26-125ØA DWP41Ø printers. These logic boards are **not** universally exchangable. In order to verify that a correct replacement board is being installed in a DWP41Ø, the following information should be used:

For use in a 26-125Ø DWP41Ø:

Use **only** the AX-9276 logic board. This board may be identified by the markings on IC4 and IC13:

AX-9276 logic board

IC4: labelled 87476814 or 87476827
IC13: labelled 87476822

For use in a 26-125ØA DWP41Ø:

Use **only** the AX-9361 logic board. This board may be identified by the markings on IC4 and IC13:

AX-9361 logic board

IC4: labelled 87476828
IC13: labelled 87476829

DATE: August 8, 1988

REVISION DATE: August 8, 1988

BULLETIN NO: I/O:125

PRODUCT: 26-1136, 26-1137, 25-1ØØ8, 25-1Ø19 Network 4 Upgrade

SUBASSEMBLY: AX-4Ø15, AX-Ø172, AX-Ø174 Network Adapter Boards

SUBASSEMBLY REVISION: All

PURPOSE: To correct network loading errors in large Network 4 installations.

DISCUSSION: Most Network 4 Adapter boards use an 8 pin Texas Instruments line driver I.C. This chip is available in two versions, one of which is labeled 75176A and one of which is labeled 75176B. In some situations, the two chip types cannot be mixed.

Generally, these situations occur when new stations are added or an adapter board is replaced in a network consisting of ten or more units. The symptom is that one or more computers will display X1 errors when loading from the network. The failing units may or may not include the new addition. If the network is reduced to include less than ten or so units, the problem will disappear.

PROCEDURE: If the situation described above occurs, check the type of the line drivers on each board. If both A and B revisions of the 75176 line driver are present, determine which type is in the minority and replace them with other type, so that only one revision of the 75176 is present in the network.

Some versions of the Tandy 1ØØØ/SX/TX board (AX-Ø172) may contain a Fairchild 3695 driver at location U24. These units do not need modification. The I.C. numbers for the 75176 line driver on the other boards are:

Catalog #	Board Part #	I.C. #
26-1136/7	AX-Ø415	U3
25-1ØØ8	AX-Ø172	U15
25-1Ø19	AX-Ø174	U1Ø

On the AX-Ø172 and AX-Ø174 boards (Network 4 and Network 4 Plus for the Tandy 1ØØØ), the 75176 I.C. may be either Dual Inline or Small Outline J lead format. In the case of Dual Inline I.C.'s, add a socket when replacing the chip. When the driver is in an SOJ package, refer to Technical Bulletin INFO:1Ø for information on soldering and desoldering surface mount I.C.'s. The two types of 75176 line drivers can be ordered in either Dual Inline or Small Outline J Lead package format using the following numbers:

I.C. Type	Catalog #	Part #
75176A (DIP)	25-1Ø19	MX-2982
75176B (DIP)	25-1Ø19	MX-Ø8Ø4
75176A-DW (SOJ)	25-1Ø19	MX-1426
75176B-DW (SOJ)	25-1Ø19	MX-1425

DATE: October 5, 1988

REVISION DATE: October 5, 1988

BULLETIN NO: I/O:126

PRODUCT: 26-28Ø4 LP1ØØØ Laser Printer

SUBASSEMBLY: AX-Ø183 Controller Board

SUBASSEMBLY REVISION: ALL

PURPOSE: Describe the procedure for upgrading the RAM from 1.5 Meg to 2.Ø Meg.

DISCUSSION:

The LP1ØØØ Laser printer comes stock with 512 K of base memory and 1.Ø Meg of expansion memory. The expansion memory is in the form of 15Ø nS 256K x 8 bit SIMM modules in locations CN-6, CN-7, CN-8, and CN-9. Positions CN-1Ø and CN-11 are open to allow upgrade to a total of 2.Ø Meg of memory by addition of two more SIMM modules.

Upgrading the memory will allow more room in RAM for custom fonts or drawings which are loaded directly into the printer. The upgrade will not effect normal page printing using the standard fonts.

The amount of RAM available in the printer is displayed on the Self Test (See below) printout sheet as "Total RAM". A printer with 1.5 Meg will show 1536 K and a printer with 2.Ø Meg will show 2Ø48 K of Total RAM. The "Available RAM" number is dependent on the setup configuration thus may be different from printer to printer.

PROCEDURE:

To upgrade a LP1ØØØ laser printer from 1.5 Meg to 2.Ø Meg of RAM do the following:

1. Verify the printer is in proper working order. Make sure that the development unit and cleaning kit are properly installed.

   Power the unit on and wait for the READY indicator to stop flashing. Press the ON/OFF LINE button to put the printer off line. When off line the !-> indicator will be off. Press the TEST button to perform a self test and examine that self test sheet for Total RAM. If 1536K is displayed then proceed to step 3. If 2Ø48K is displayed then the printer is already upgraded.

3. Disconnect all power from the printer and remove the six screws which hold the top case in place. The two front screws are under the front top cover lip. Lift up on the release lever to gain access to these screws. See the diagram below.

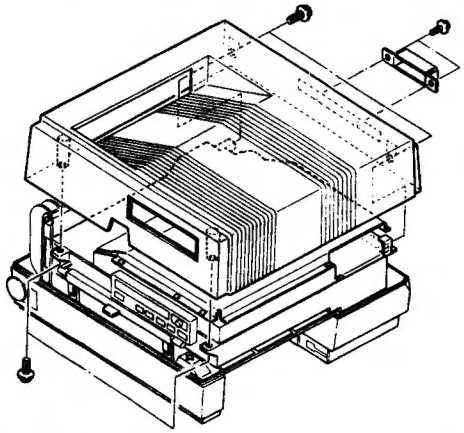

Use care to not drop any screws into the bottom of the printer.

4. LOOSEN the seven screws which hold the PCB shield in place and lift the shield up and out.

5. Located on the lower of the two boards (the controller PCB) are six SIMM sockets, four of which are occupied by SIMM modules.

   OBSERVING PROPER STATIC CONTROL PROCEDURES, install the two additional SIMM modules. This is done by placing the modules, one at a time, into an empty socket while leaning it slightly backwards. Make sure that the module is laterally aligned with the edges of the socket.

7. Once in place, move the top edge of the module forward until the clips on each side of the socket hold the module firmly in place. When properly installed the socket clips will occupy the holes in each end of the SIMM module and the module will fit squarely into the socket.

8. Re-install the PCB shield and top case.

9. Perform a self test to verify that the Total RAM figure shows 2Ø48K of RAM. If it does not show this number then go back and re-check your work.

1Ø. Verify full operation of the printer with a computer source and the appropriate diagnostic programs.

Note: The SIMM modules used in the LP1ØØØ are NOT interchangable with those used in the Tandy 5ØØØMC, 4ØØØLX, 4ØØØ, or 3ØØØNL.

PARTS:

Description	National Parts Number	Catalog Number
15Ø nS 256Kx8 SIMM Module	AX-Ø169	26-28Ø4

 COPYRIGHT © 1988

TANDY COMPUTER PRODUCTS

DATE: October 11, 1988

REVISION DATE: October 11, 1988

BULLETIN NO: I/O:127

PRODUCT: 26-6Ø52 DT-1ØØ

SUBASSEMBLY: AX-9522/A Main Logic PCB

SUBASSEMBLY REVISION: All Revisions

PURPOSE: To insure keyboard connectability.

DISCUSSION/PROCEDURE:

There are two types of keyboard connectors found on DT-1ØØ terminals. On the early version, the pins protruded from the end of the keyboard cable and plugged directly into the connector on the rear of the logic board. On the later versions, the pins on the end of the cable are covered with a round metal shield. This required a change in the connector at the rear of the logic board to allow for the shield when the cable is plugged in. If a new style logic board is replaced with an old style board, the keyboard connectors will no longer fit.

There are two possible solutions to this problem. When exchanging these two types of boards, the connector could easily be removed (2 screws, 1 plug) from the original logic card and installed on the replacement card. If for some reason this is not feasible, the new style of connector (allows for the shield) can be ordered from National Parts under the following number.

Part# WG-ØØØ1 Catalog# 26-6Ø52

Also be aware that the difference in the parts AX-9522 and AX-9522A has nothing to do with this connector. The difference is in the location of the video/power supply harness connector.

 COPYRIGHT © 1988

TANDY COMPUTER PRODUCTS

DATE: October 14, 1988

REVISION DATE: October 14, 1988

BULLETIN NO: I/O:128

PRODUCT: 26-Ø25Ø BPS 25Ø Backup Power Supply

SUBASSEMBLY: S-37Ø3 Power Switch

SUBASSEMBLY REVISION: All revision levels

PURPOSE: To clarify wiring connections for different power switches.

DISCUSSION: There are 3 different types of power switches which may be used in the BPS 25Ø. Functionality has not changed, only the wiring connection points. These switches can be identified by contact pin numbers which are molded into the plastic switch case. Look at the back side of the switch next to the contact pins to see the molded numbers on the switch itself, and then match them up to the appropriate diagram. Below are the numbering schemes and wiring diagrams for the 3 different manufacturers' switches. All diagrams are shown as if looking at the connection side of the switch.

ARROW HART SWITCH

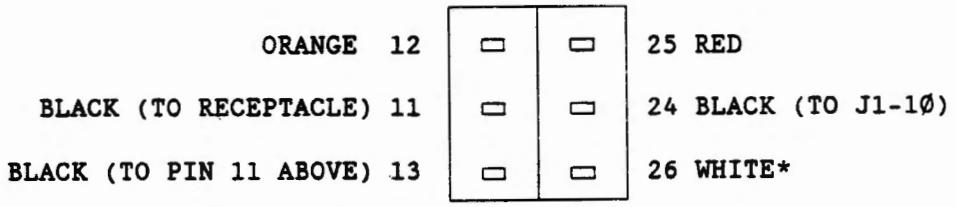

ITW SWITCH

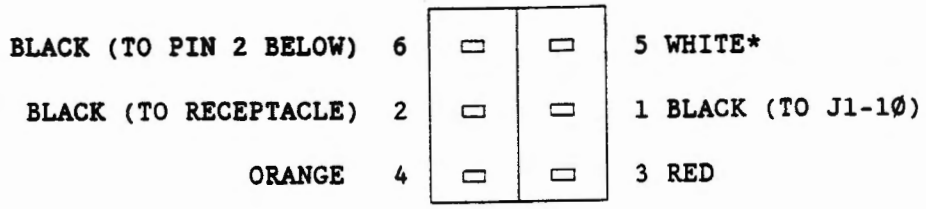

OSLO SWITCH **

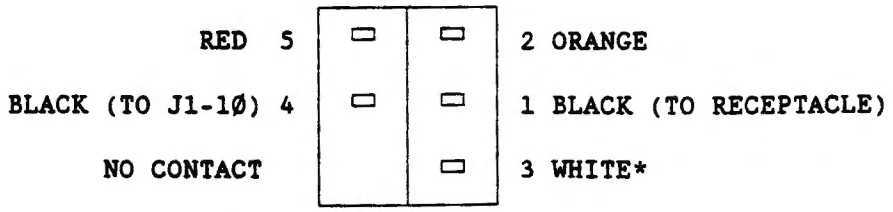

* NOTE: In some earlier units, this wire was a light green color.

** NOTE: The OSLO switch has only five contacts. The sixth contact is actually missing. If you replace either an ARROW HART or an ITW switch (both with six contacts) with an OSLO switch (with five contacts), you will have an extra loop of black wire (the one that would normally connect to the sixth contact). This extra loop of black wire is no longer necessary, so remove it and discard it.

TANDY COMPUTER PRODUCTS

DATE: Janurary 19, 1989

REVISION DATE: March 1Ø, 1989

BULLETIN NO: I/O:129

PRODUCT: DMP-13ØA (26-128ØA)

SUBASSEMBLY: All

SUBASSEMBLY REVISION: All

PURPOSE: To prevent possible damage to the main logic board from power supply failure.

DISCUSSION:

The DMP-13ØA (26-128ØA) Dot Matrix Printer contains on the main logic board a switching power supply. This power supply uses one switching regulator to provide the 24 volt output for the motors and print head and a second switching regulator to develope the 5 volt logic supply. The second regulator is sourced by the 24 volt line. If the 5 volt supply should fail, there is an opportunity for excessive voltage to reach the main logic board chips as well as damage occuring to the 24 volt supply. To help prevent damage to the main logic board should this occur, two fuses need to be added into the outputs of the power supplies.

******* Compliance with this Technical Bulletin is MANDATORY *******

PROCEDURE:

```
********************** W A R N I N G ! **********************
*                                                           *
*  This modification requires cutting of heavy traces on the *
*  logic board.  Use extreme care to prevent damage to the   *
*  logic board or the technician.                            *
*                                                           *
*************************************************************
```

To perform this modification do the following:

1.) Locate and remove the two inductors labeled L1 and L2 on the main logic board. If one or both of the inductors removed are the bobbin type they will need to be replaced with the round type. See figure 1.

2.) Locate and remove the two transistors labeled Q9 and Q11. If these are not 2SA1598 components they will need to be replaced.

3.) Three trace cuts will need to be made on the solder side of the logic board. Two of the cuts are on one of the solder pads for L1 and the final cut is on one solder pad for L2. Reference figure 2 to see where these cuts are made.

4.) Install one of the round style inductors at location L1 in the holes closest to the outside edge of the board. See figure 3.

5.) Install the second round style inductor at location L2 in the holes closest to the middle of the board. See figure 3.

6.) Mount a heatsink onto one of the 2SA1598 transistors as shown in figure 4. Install this transistor at location Q9. The heatsink fins may need to be bent slightly to allow clearance for other devices on the board.

7.) Mount the second heatsink onto the second 2SA1598 transistor in the reverse direction. See figure 4. Install the transistor at location Q11. The heatsink should wrap around C29 without touching it. The heatsink fins may need to be bent slightly to allow clearance for other components on the board.

8.) Install one of the 1.5A fuses into the center two pins at L1. Install the other 1.5A fuse in the two pins at L2 which are closest to R36. See figure 5.

9.) On the solder side of the circuit board a jumper must be added. Locate the remaining hole on the solder pad for L1. This hole has a trace that leads to Q10 the 78L05 voltage regulator. Jumper from this point to the pad connecting coil L1 and the fuse using insulated wire of 20-22 GA. See figure 6.

10.) On the solder side of the circuit board a 27 volt zener diode must be added between the emitter of Q9 and ground with the cathode on the emitter. See figure 6.

11.) Insulate the connections on the jumper wire and on the diode with electrical tape to prevent shorting to the chassis.

Parts for this modification may be ordered as:

Part Number		Catalog Number
ACA-1002	500uH Coil	25-1280A
2SA-1598	Transistor	25-1280A
DX-2317	27v 1watt Zener	26-1272
	1.5A pigtail fuse	Obtain Locally
	TO-220 Heatsink	Obtain Locally

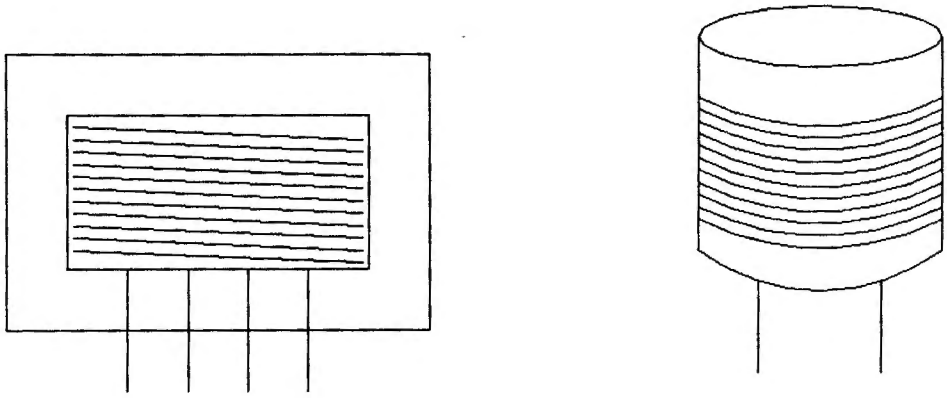

Bobbin Type Round Type

Figure 1

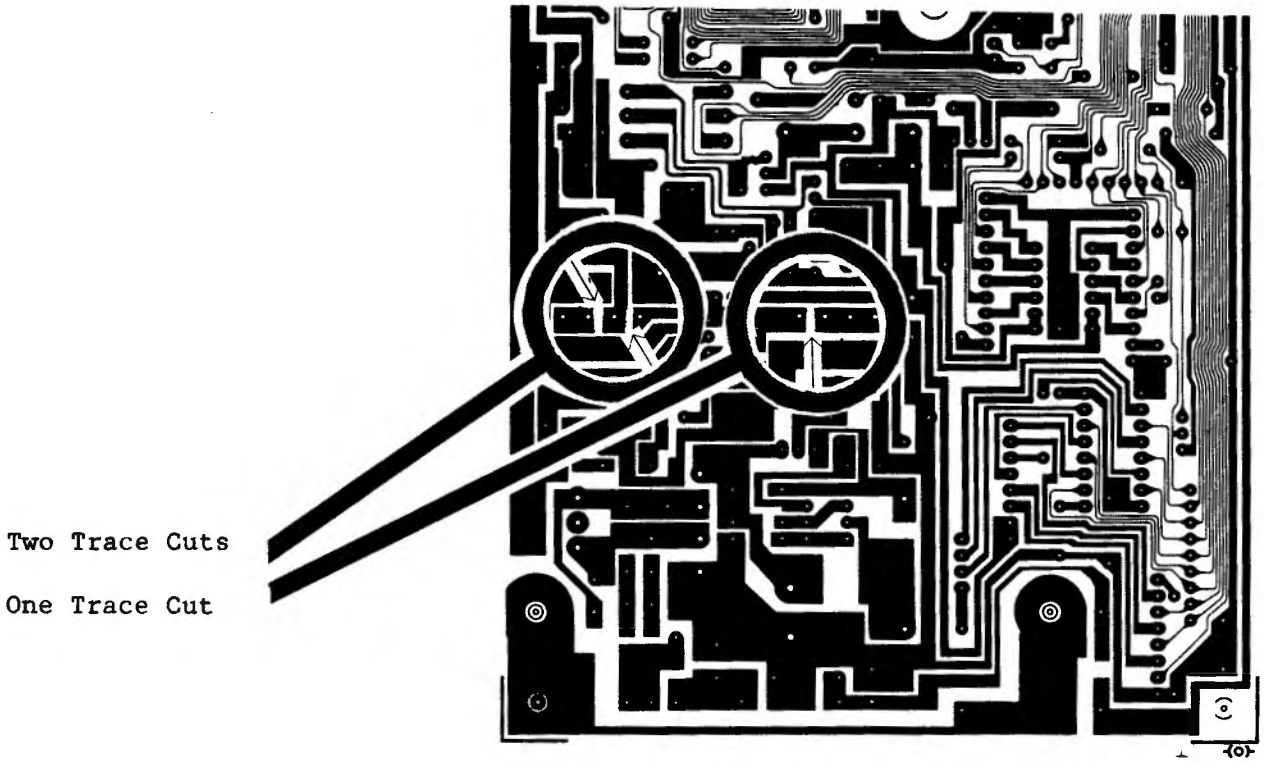

Solder Side

Figure 2

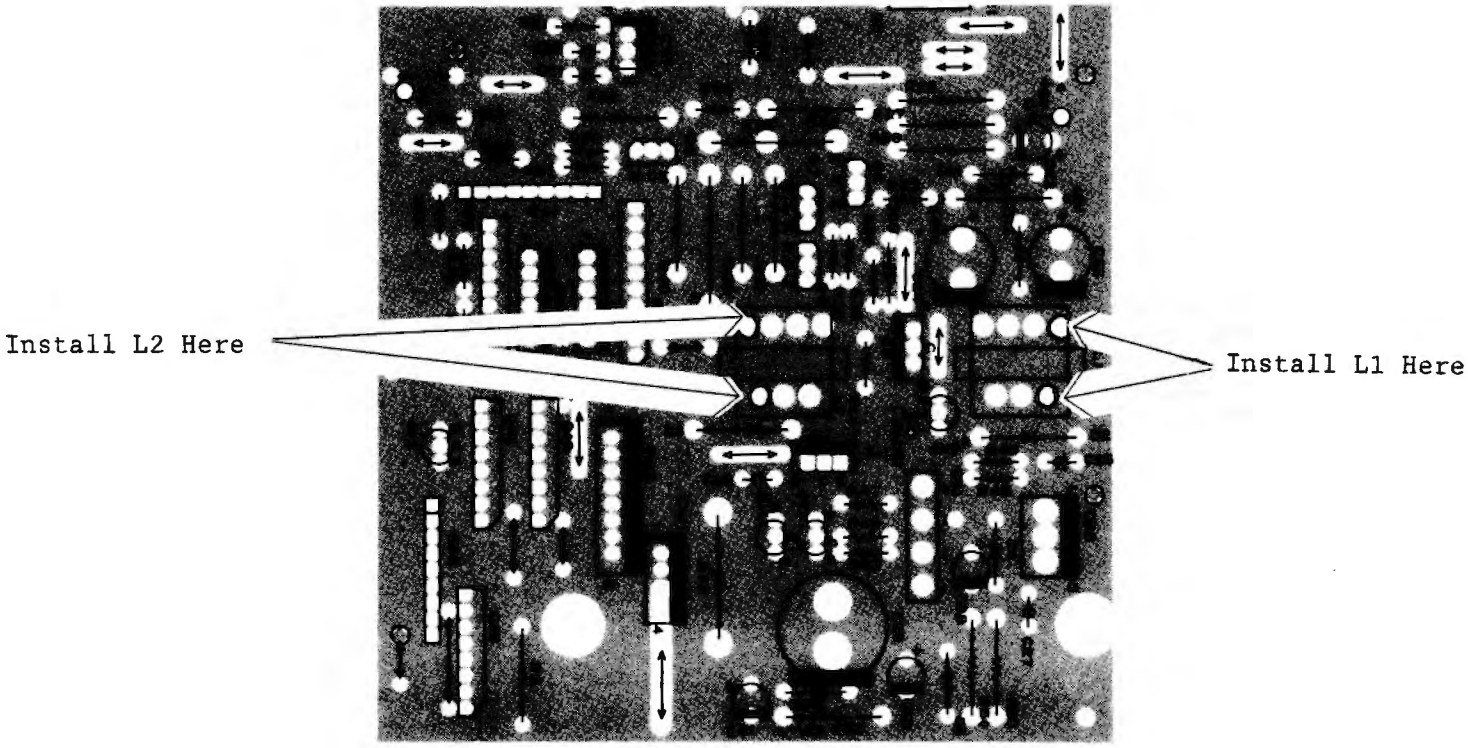

Component Side

Figure 3

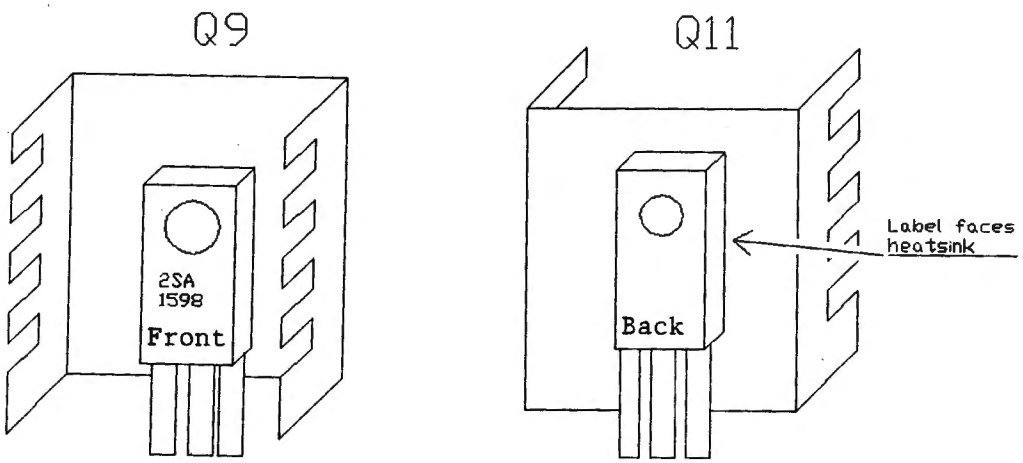

Figure 4

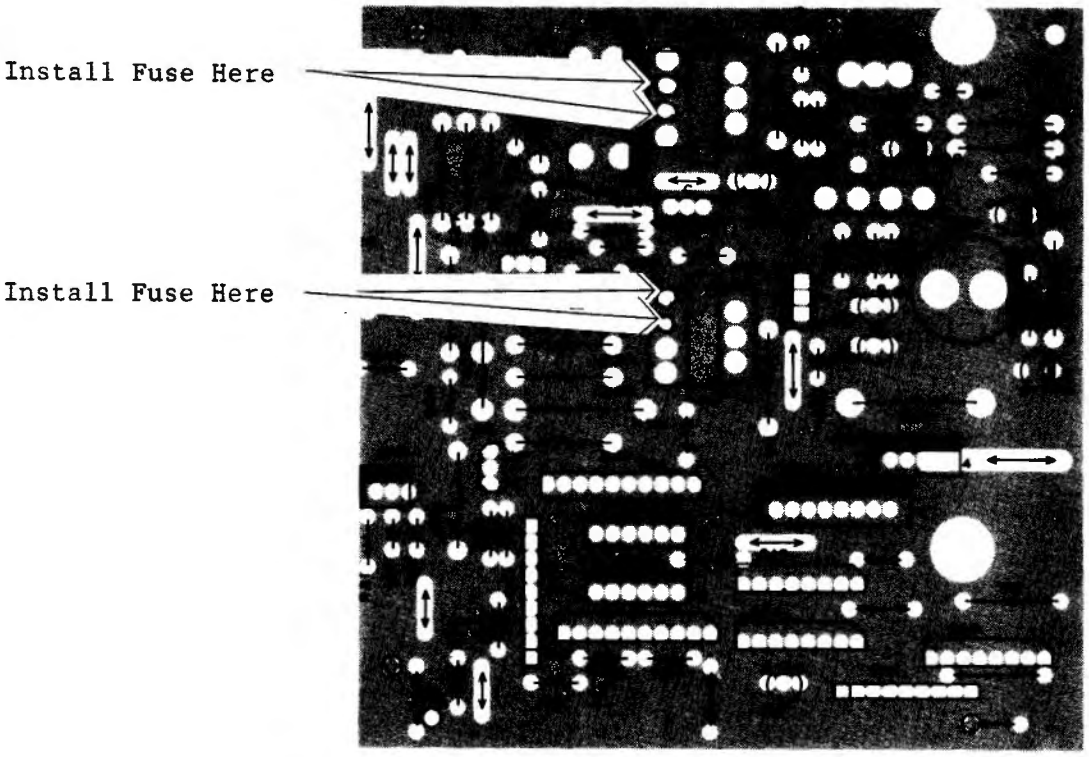

Figure 5

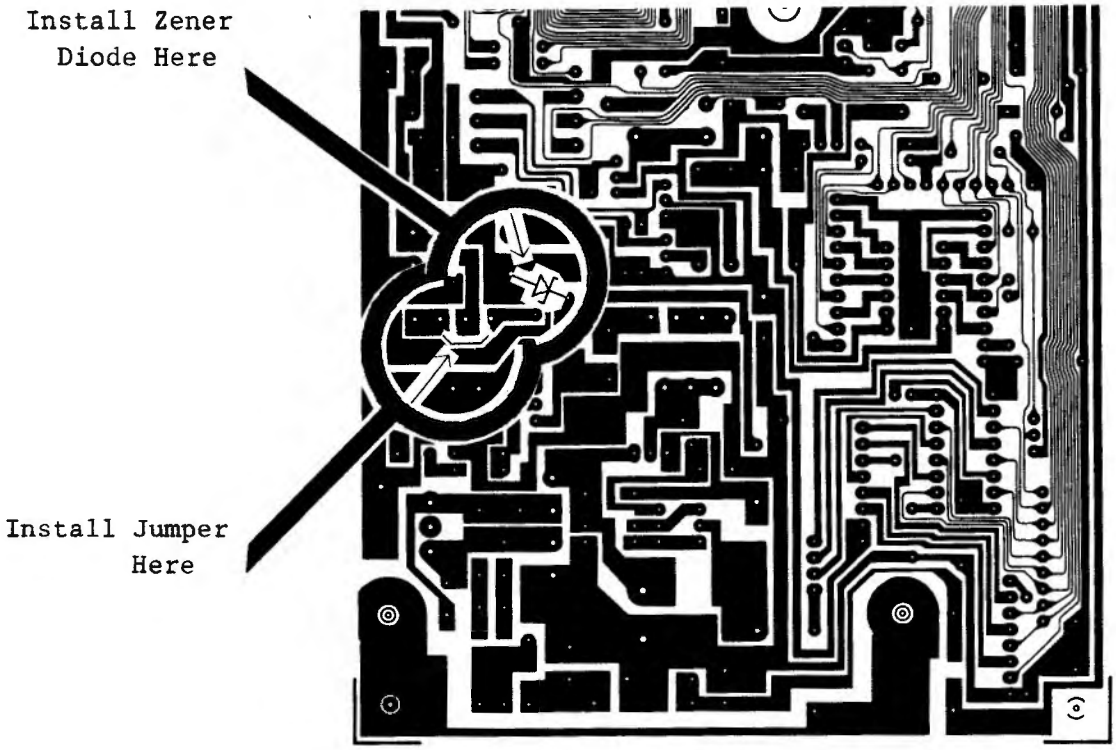

Figure 6

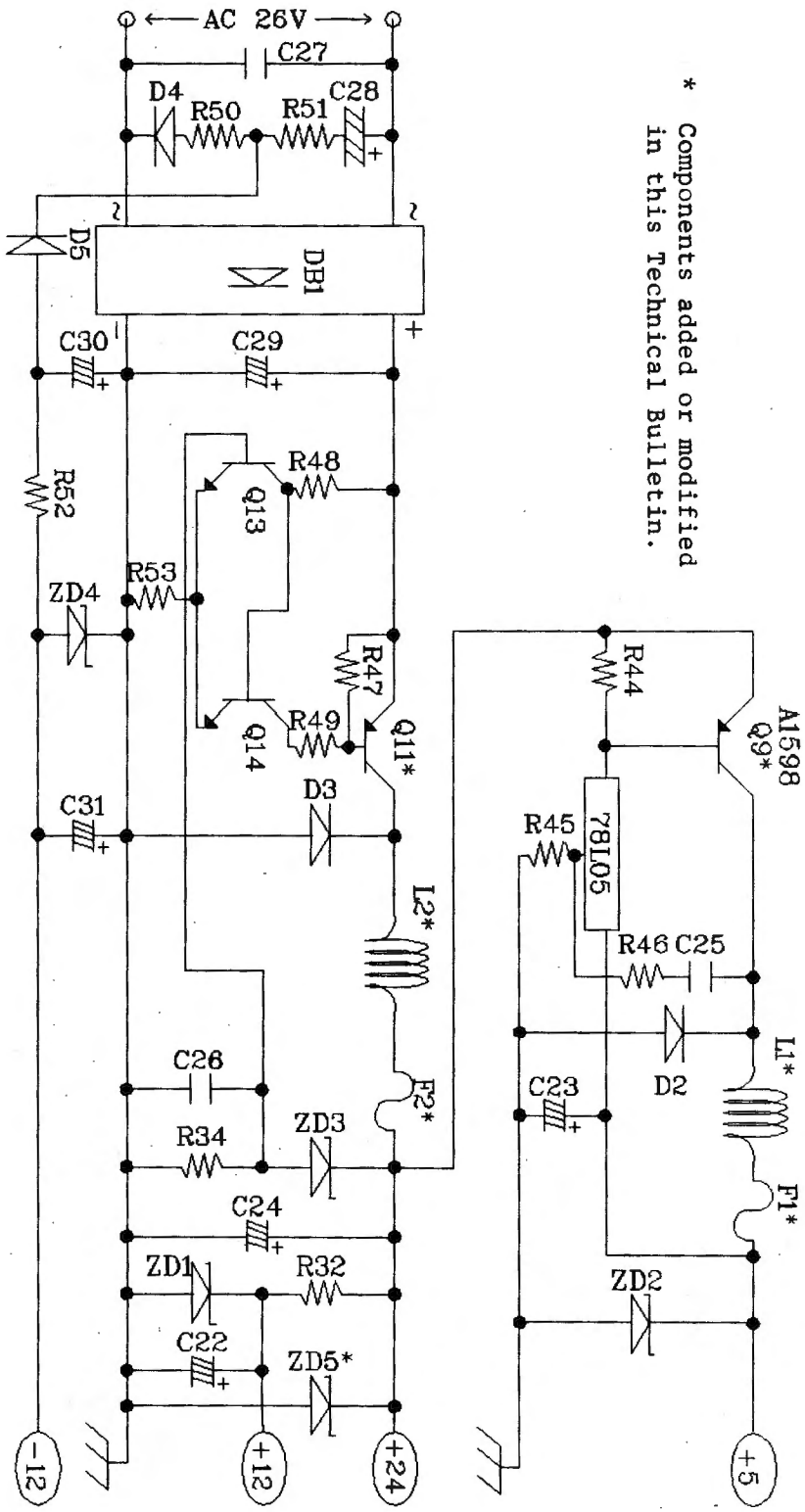

* Components added or modified in this Technical Bulletin.

 COPYRIGHT © 1989

TANDY COMPUTER PRODUCTS

OBSOLETE

DATE:	Janurary 19, 1989
REVISION DATE:	May 23, 1989
BULLETIN NO:	I/O:129
PRODUCT:	DMP-13ØA (26-128ØA)
SUBASSEMBLY:	All
SUBASSEMBLY REVISION:	All

PURPOSE: To prevent possible damage to the main logic board from power supply failure.

DISCUSSION:

The DMP-13ØA (26-128ØA) Dot Matrix Printer contains on the main logic board a switching power supply. This power supply uses one switching regulator to provide the 24 volt output for the motors and print head and a second switching regulator to develope the 5 volt logic supply. The second regulator is sourced by the 24 volt line. If the 5 volt supply should fail, there is an opportunity for excessive voltage to reach the main logic board chips as well as damage occuring to the 24 volt supply. To help prevent damage to the main logic board should this occur, two fuses need to be added into the outputs of the power supplies.

******* Compliance with this Technical Bulletin is MANDATORY *******

PROCEDURE:

```
********************** W A R N I N G ! **********************
*                                                            *
*  This modification requires cutting of heavy traces on the *
*  logic board. Use extreme care to prevent damage to the    *
*  logic board or the technician.                            *
*                                                            *
**************************************************************
```

To perform this modification do the following:

1.) Locate and remove the two inductors labeled L1 and L2 on the main logic board. If one or both of the inductors removed are the bobbin type they will need to be replaced with the round type. See figure 1.

2.) Locate and remove the two transistors labeled Q9 and Q11. If these are not 2SA1598 components they will need to be replaced.

3.) Three trace cuts will need to be made on the solder side of the logic board. Two of the cuts are on one of the solder pads for L1 and the final cut is on one solder pad for L2. Reference figure 2 to see where these cuts are made.

4.) Install one of the round style inductors at location L1 in the holes closest to the outside edge of the board. See figure 3.

5.) Install the second round style inductor at location L2 in the holes closest to the middle of the board. See figure 3.

6.) Mount a heatsink onto one of the 2SA1598 transistors as shown in figure 4. Install this transistor at location Q9. The heatsink fins may need to be bent slightly to allow clearance for other devices on the board.

7.) Mount the second heatsink onto the second 2SA1598 transistor in the reverse direction. See figure 4. Install the transistor at location Q11. The heatsink should wrap around C29 without touching it. The heatsink fins may need to be bent slightly to allow clearance for other components on the board.

8.) Install one of the 1.5A fuses into the center two pins at L1. Install the other 1.5A fuse in the two pins at L2 which are closest to R36. See figure 5.

9.) On the solder side of the circuit board a jumper must be added. Locate the remaining hole on the solder pad for L1. This hole has a trace that leads to Q1Ø, the 78LØ5 voltage regulator. Jumper from this point to the pad connecting coil L1 and the fuse, using insulated wire of 2Ø-22 GA. See figure 6.

1Ø.) On the solder side of the circuit board a 27 volt zener diode must be added between the emitter of Q9 and ground, with the cathode (banded side) connected to the emitter. See figure 6.

11.) Insulate the connections on the jumper wire and on the diode with electrical tape to prevent shorting to the chassis.

Parts for this modification may be ordered as:

Quantity	Part Number	Description	Catalog Number
2)	CA-Ø439	5ØØuH Coil	25-128ØA
2)	2SA-1598	Transistor	25-128ØA
1)	DX-2317	27v 1watt Zener	26-1272
2)	1.5 AMP	Axial-lead Pico, Subminiature Fuse	Obtain Locally
2)	276-1363	TO-22Ø Heat Sink	Obtain Locally

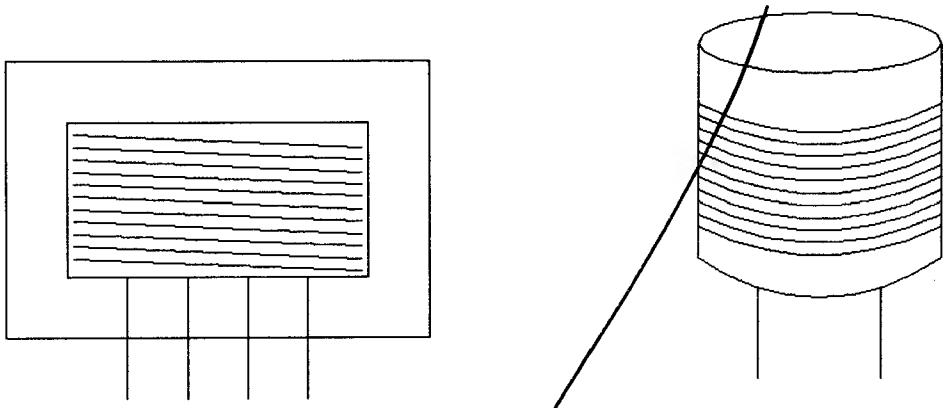

Bobbin Type

Round Type

Figure 1

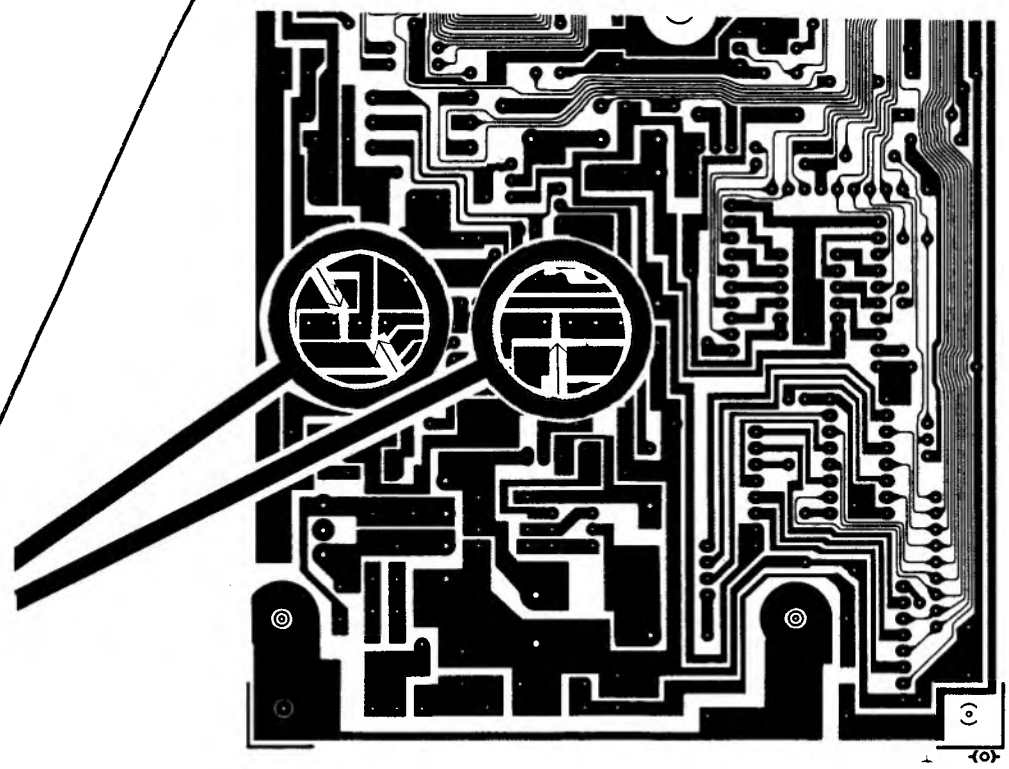

Two Trace Cuts

One Trace Cut

Solder Side

Figure 2

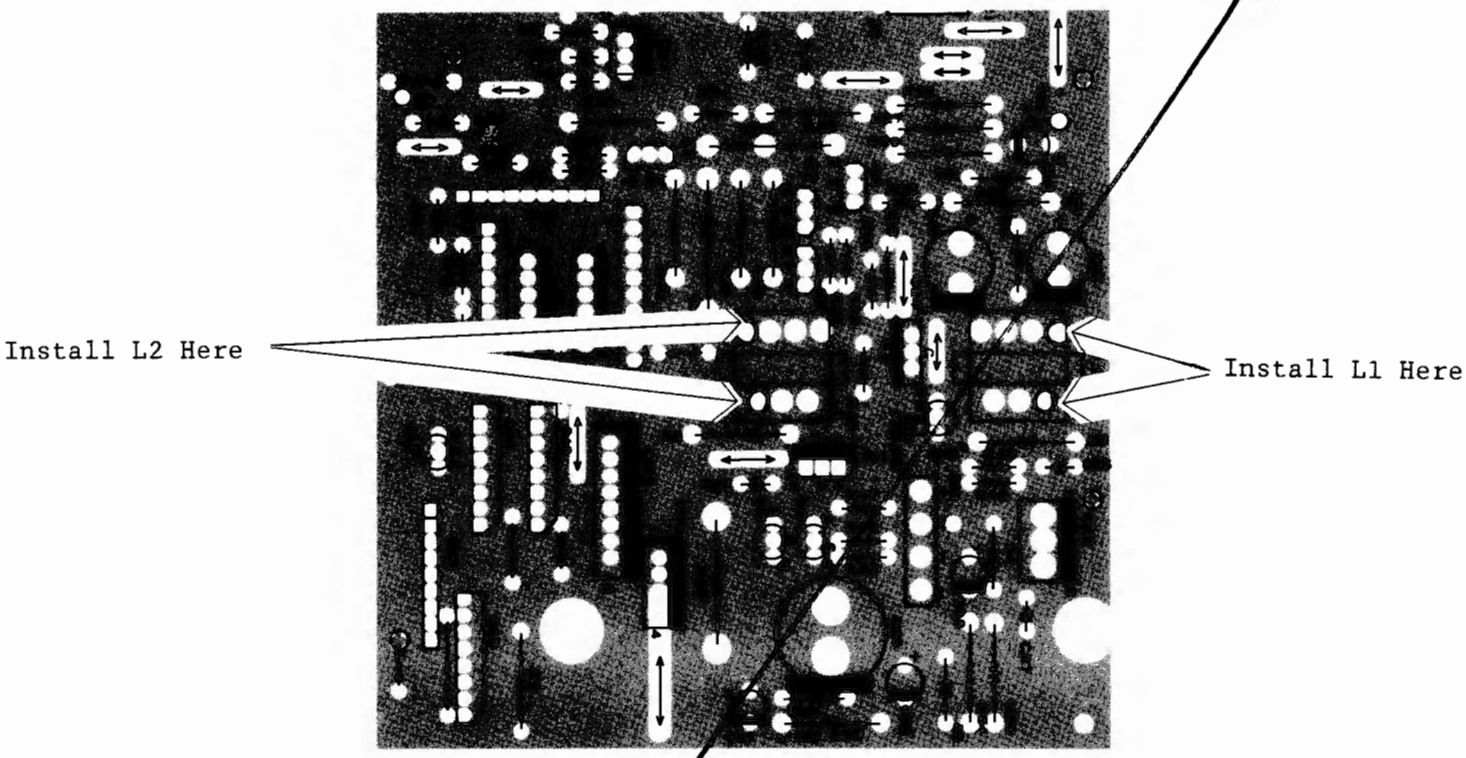

Component Side

Figure 3

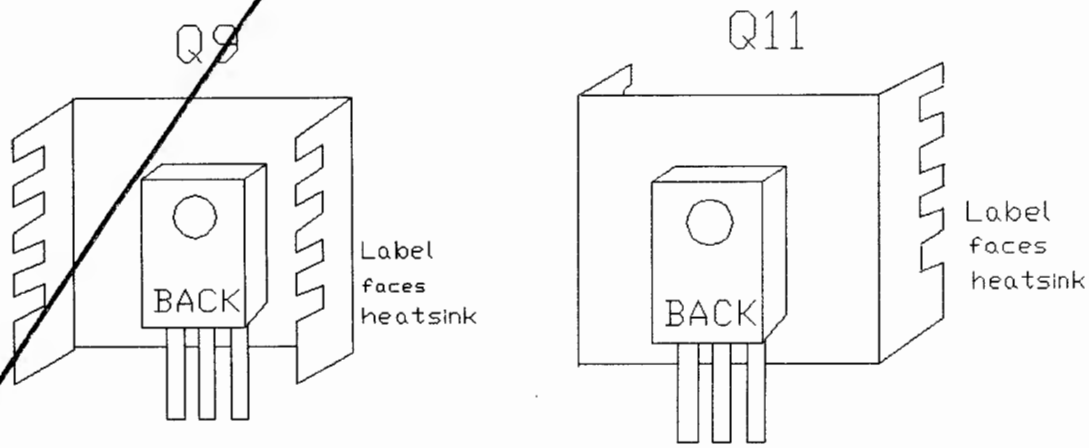

Figure 4

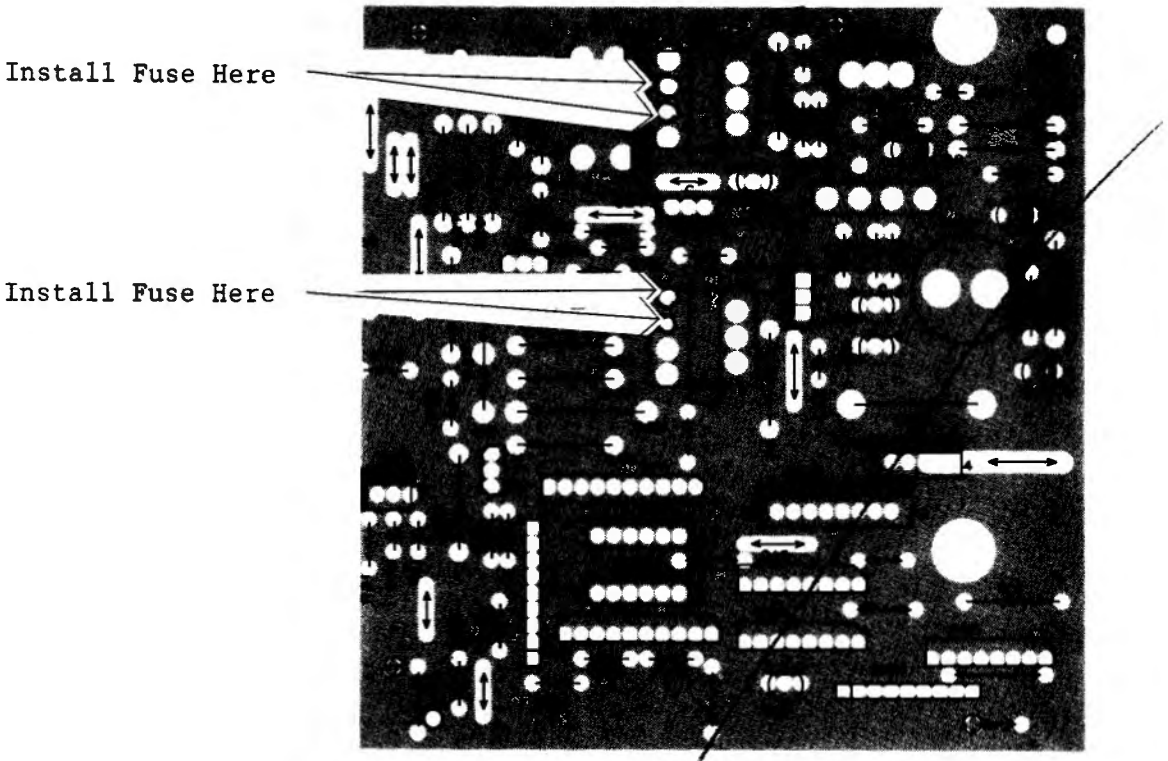

Figure 5

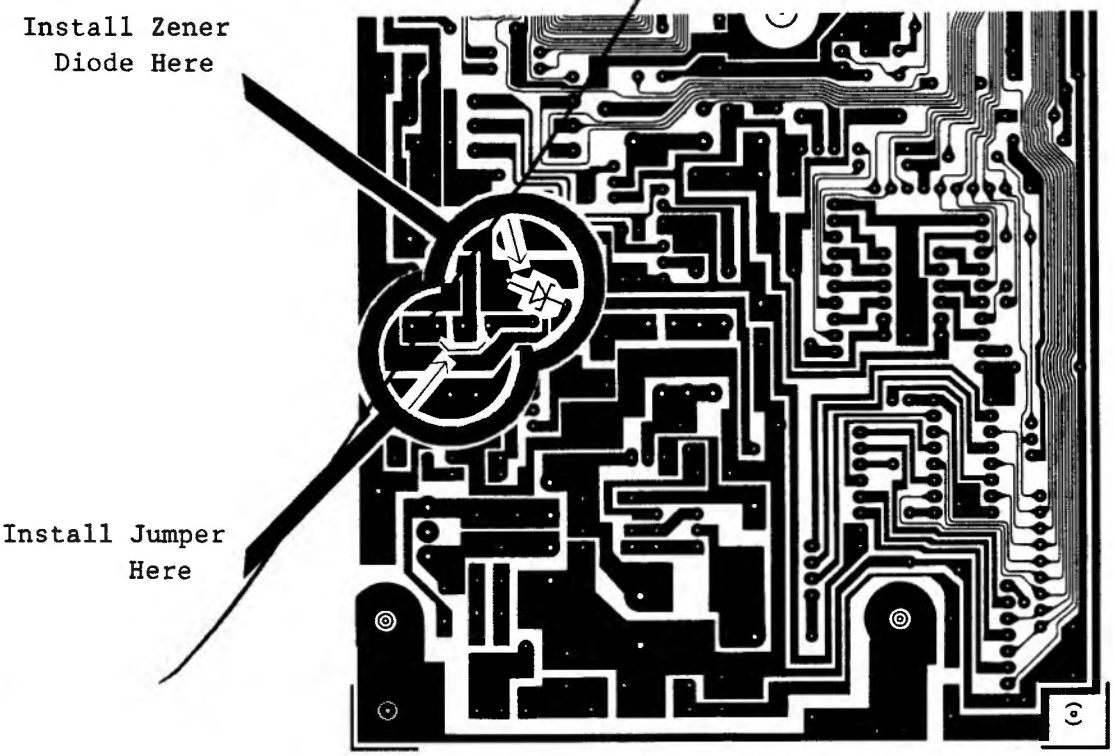

Figure 6

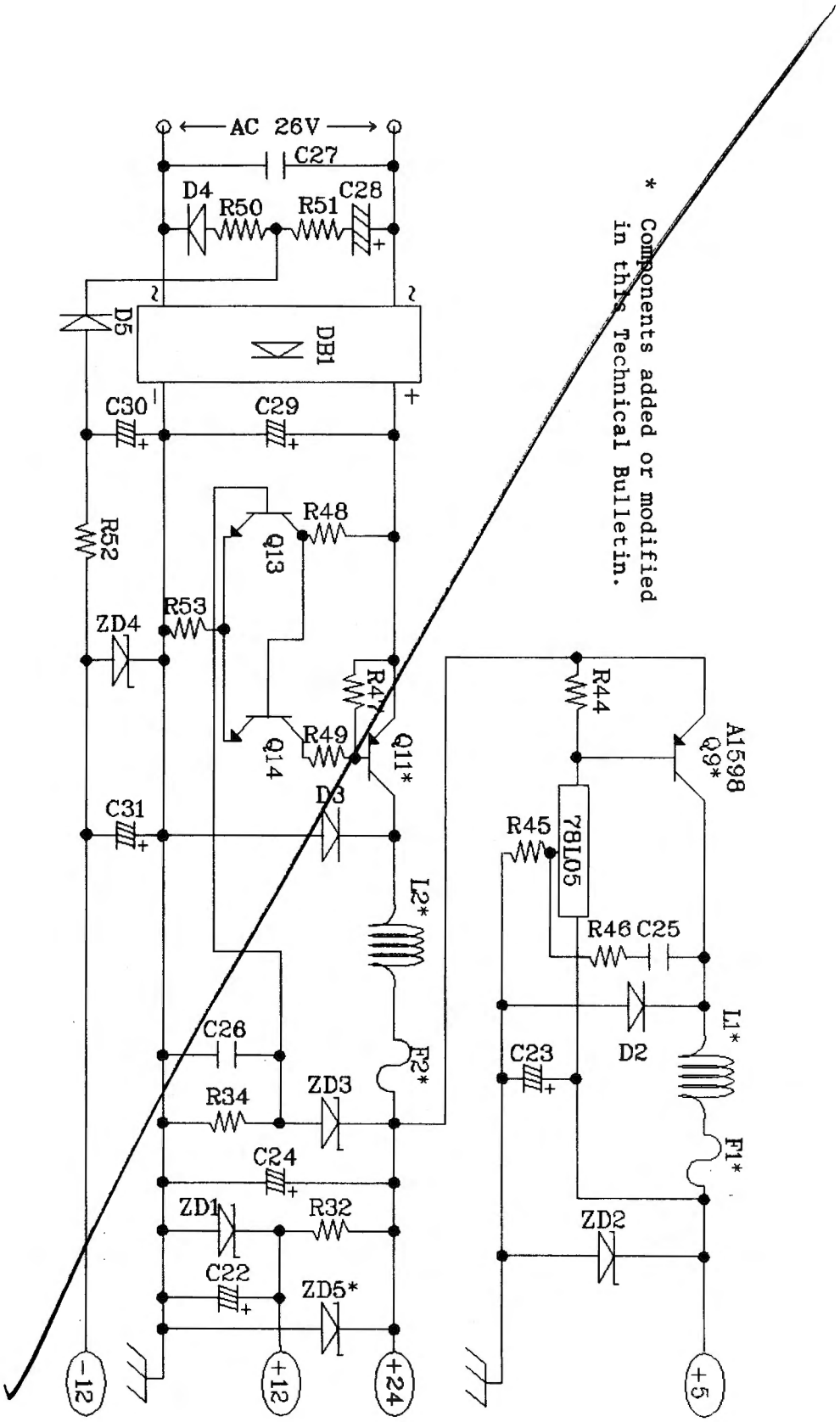

* Components added or modified in this Technical Bulletin.

 COPYRIGHT © 1989

TANDY COMPUTER PRODUCTS

OBSOLETE

DATE:	Janurary 19, 1989
REVISION DATE:	Janurary 19, 1989
BULLETIN NO:	I/O:129
PRODUCT:	DMP-13ØA (26-128ØA)
SUBASSEMBLY:	All
SUBASSEMBLY REVISION:	All

PURPOSE: To prevent possible damage to the main logic board from power supply failure.

DISCUSSION:

The DMP-13ØA (26-128ØA) Dot Matrix Printer contains on the main logic board a switching power supply. This power supply uses one switching regulator to provide the 24 volt output for the motors and print head and a second switching regulator to develope the 5 volt logic supply. The second regulator is sourced by the 24 volt line. If the 5 volt supply should fail, there is an opportunity for excessive voltage to reach the main logic board chips as well as damage occuring to the 24 volt supply. To help prevent damage to the main logic board should this occur, two fuses need to be added into the outputs of the power supplies.

******* Compliance with this Technical Bulletin is MANDATORY *******

PROCEDURE:

```
********************** W A R N I N G ! **********************
*                                                            *
*  This modification requires cutting of heavy traces on the *
*  logic board. Use extreme care to prevent damage to the    *
*  logic board or the technician.                            *
*                                                            *
**************************************************************
```

To perform this modification do the following:

1.) Locate and remove the two inductors labeled L1 and L2 on the main logic board. If one or both of the inductors removed are the bobbin type they will need to be replaced with the round type. See figure 1.

2.) Locate and remove the two transistors labeled Q9 and Q11. If these are not 2SA1598 components they will need to be replaced.

3.) Three trace cuts will need to be made on the solder side of the logic board. Two of the cuts are on one of the solder pads for L1 and the final cut is on one solder pad for L2. Reference figure 2 to see where these cuts are made.

4.) Install one of the round style inductors at location L1 in the holes closest to the outside edge of the board. See figure 3.

5.) Install the second round style inductor at location L2 in the holes closest to the middle of the board. See figure 3.

6.) Mount a heatsink onto one of the 2SA1598 transistors as shown in figure 4. Install this transistor at location Q9. The heatsink fins may need to be bent slightly to allow clearance for other devices on the board.

7.) Mount the second heatsink onto the second 2SA1598 transistor in the reverse direction. See figure 4. Install the transistor at location Q11. The heatsink should wrap around C29 without touching it. The heatsink fins may need to be bent slightly to allow clearance for other components on the board.

8.) Install one of the 1.5A fuses into the center two pins at L1. Install the other 1.5A fuse in the two pins at L2 which are closest to R36. See figure 5.

9.) On the solder side of the circuit board a jumper must be added. Locate the remaining hole on the solder pad for L1. Jumper from this point to the input side of coil L1 using insulated wire of 20-22 GA. See figure 6.

10.) On the solder side of the circuit board a 27 volt zener diode must be added between the emitter of Q9 and ground with the cathode on the emitter. See figure 6.

11.) Insulate the connections on the jumper wire and on the diode with electrical tape to prevent shorting to the chassis.

Parts for this modification may be ordered as:

ACA-1002 on Backorder
2SA 1598 Replaced
By 2TR-0149

DX-2317 NLA
obtain Locally

Part Number		Catalog Number
ACA-1002	500uH Coil	25-1280A
2SA-1598	Transistor	25-1280A
DX-2317	27v 1watt Zener	26-1272
	1.5A pigtail fuse	Obtain Locally
	TO-220 Heatsink	Obtain Locally

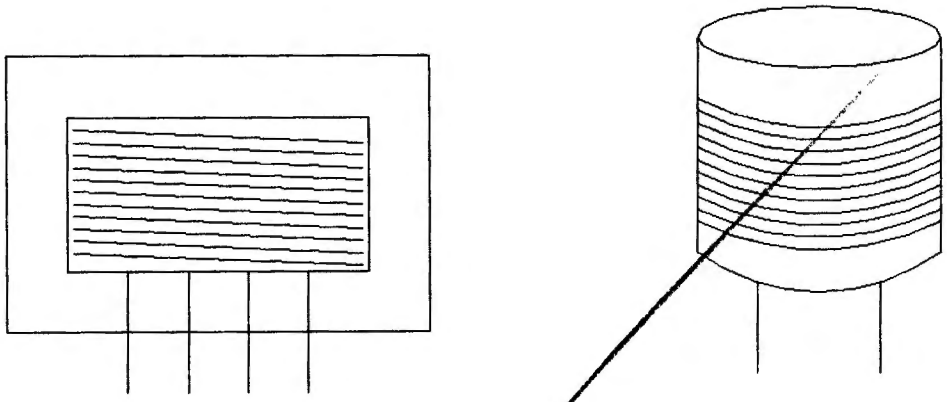

Bobbin Type

Round Type

Figure 1

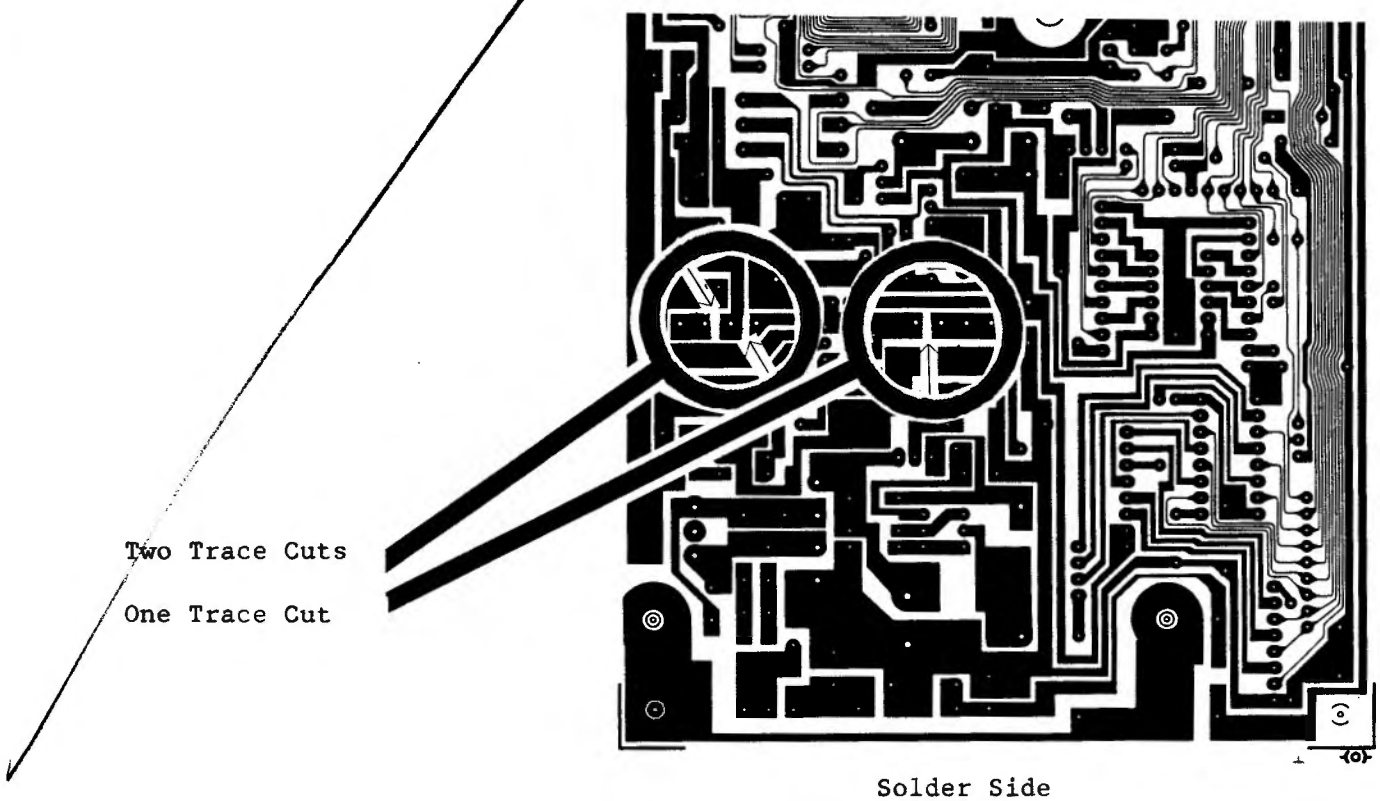

Solder Side

Figure 2

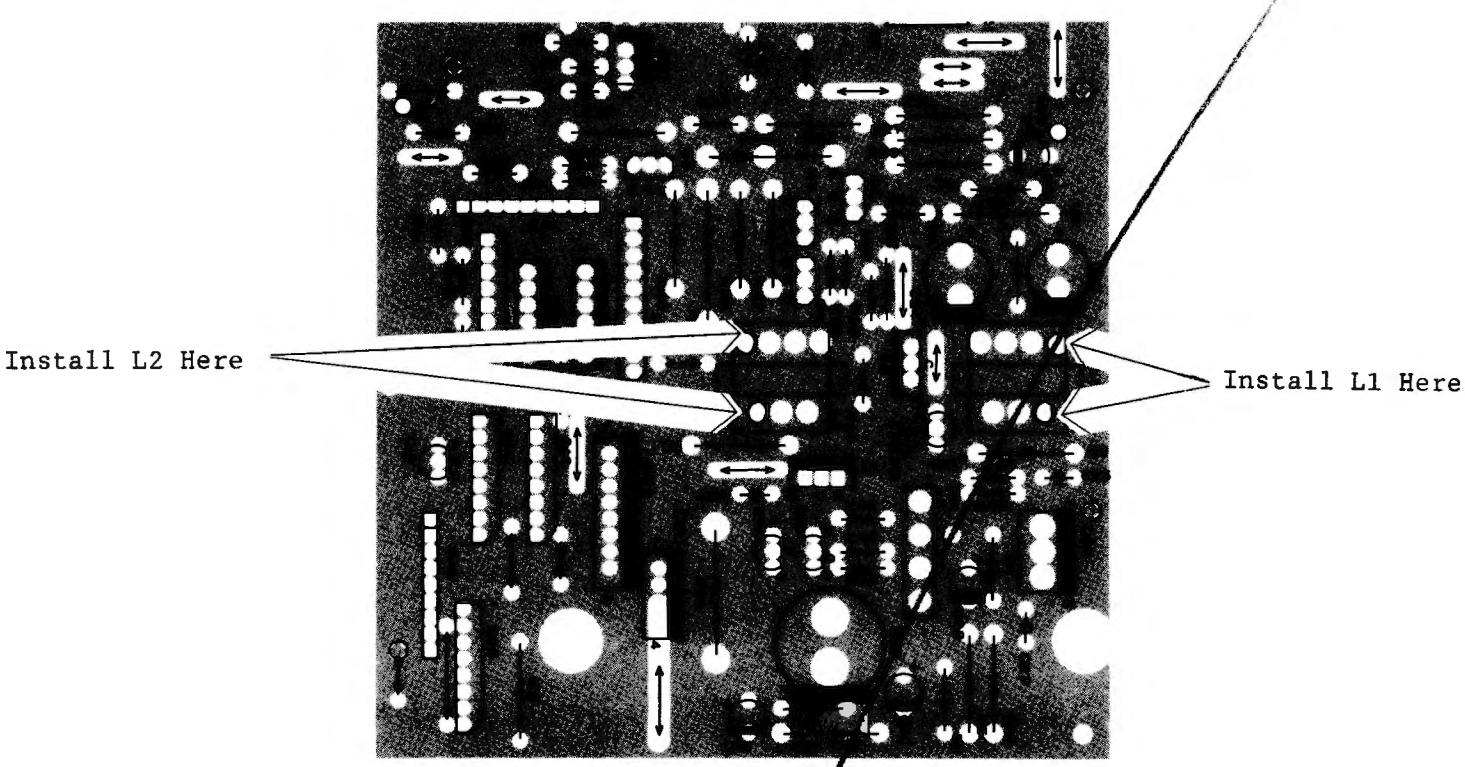

Component Side

Figure 3

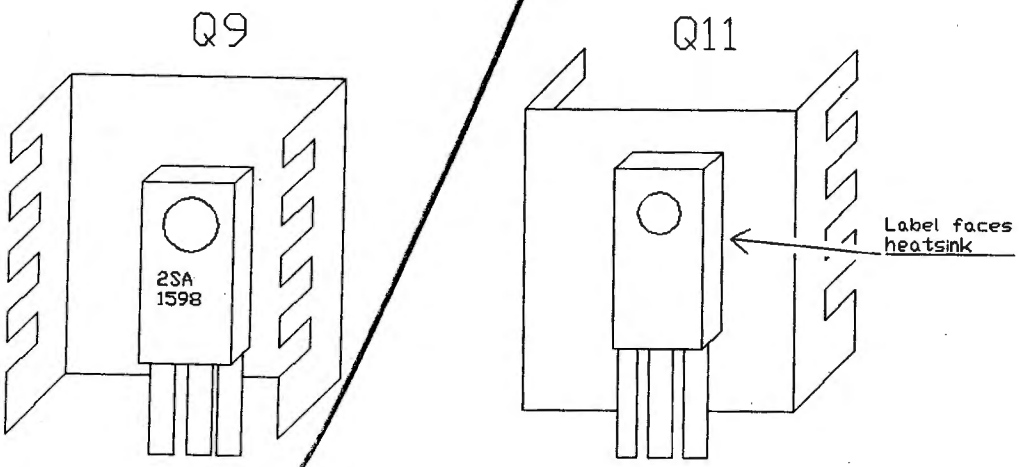

Figure 4

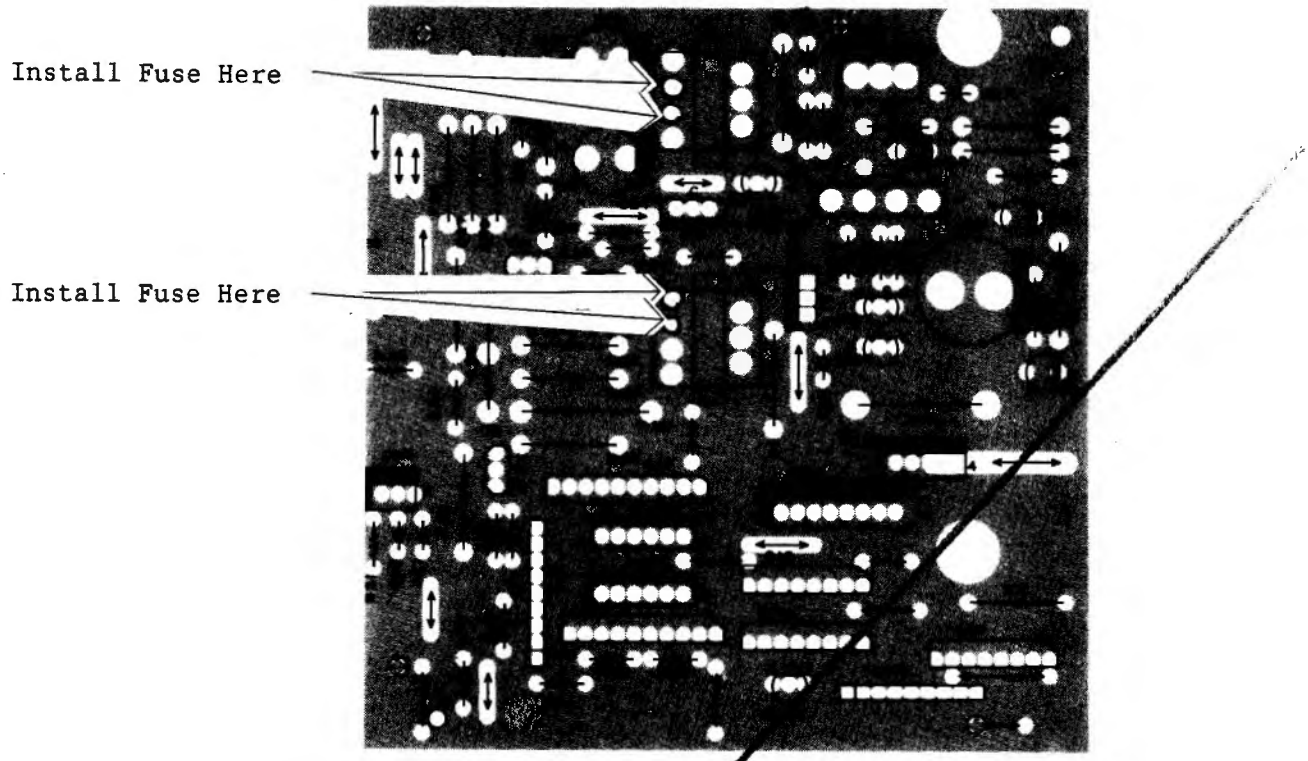

Figure 5

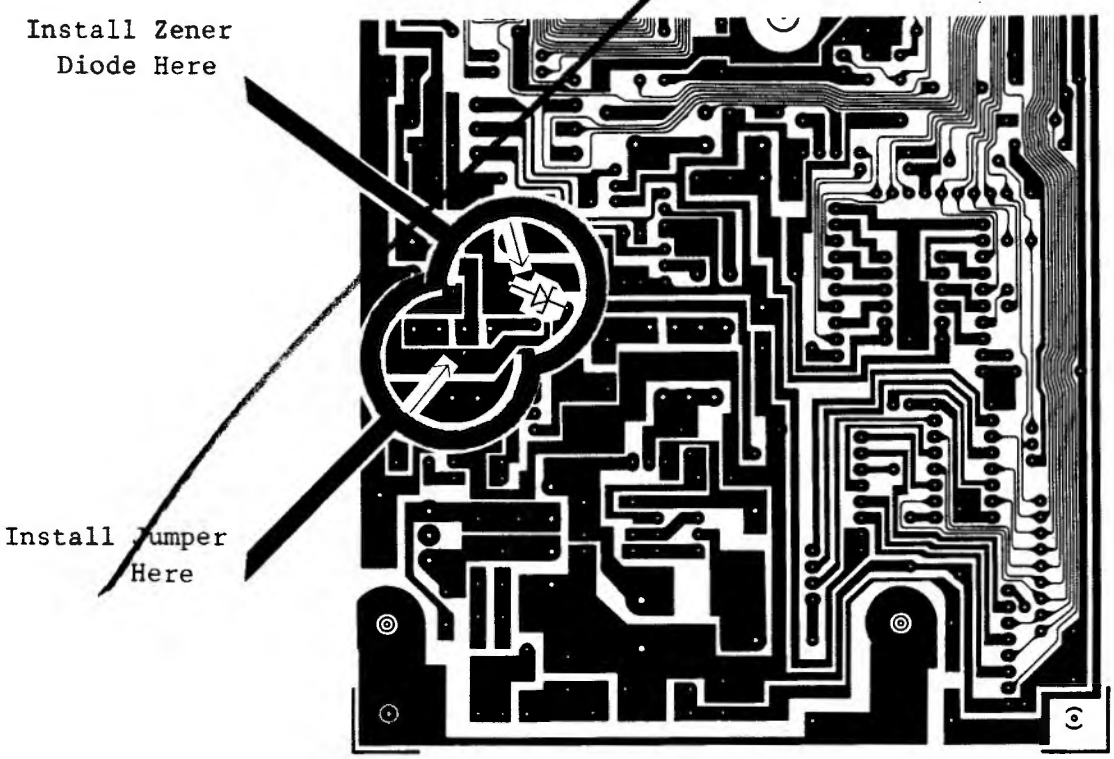

Figure 6

 COPYRIGHT © 1989

DATE: March 7, 1989

REVISION DATE: March 7, 1989

BULLETIN NO: I/O:13Ø

PRODUCT: 3COM® Etherlink® Boards

SUBASSEMBLY: Etherlink® Board (26-5435) (AX-Ø176)
Etherlink® Plus (26-55Ø2) (AX-Ø177)
Etherlink® II Board (26-55Ø1) (AX-Ø228)
3 Server 3 (26-555Ø) (AX-Ø212)
3S/4Ø1 (26-5552) (AX-Ø231)

SUBASSEMBLY REVISION: All

PURPOSE: To provide software compatibility when servicing an Etherlink® board in a PC Server or 3 Server.

DISCUSSION: All 3COM® Etherlink® boards and 3 Server main logic boards come with a 16 pin Address PROM installed which makes up part of the network address for the system. In a server, this physical address is used to mate the hard drive to the software. When a new software installation is completed, the PROM address will be recorded into the server software mating the hard drive to the Etherlink® board. When the system is started, the software on the hard drive will check for the presence of the proper network address of the 3 Server or Etherlink® board installed.

If the Etherlink® board in the server fails and requires replacement, it is important to remove the Address PROM from the failed board and install it into the replacement board. This will continue the proper operation of the hardware/software in a normal fashion. If this Address PROM is not switched, the software will not locate the address required and not function at all. This will mean complete software re-installation at the expense of many hours of needless effort and possible loss of customer data. **This only applies to Etherlink® boards found in PC servers or the main logic boards of 3 Servers.** The network address of Etherlink® boards used in workstations is not tied to the network software in any way. Therefore, if an Etherlink® board is to be replaced in a workstation, the board may be replaced without the need to swap the Address PROM.

PROCEDURE: Anytime an Etherlink® board in a PC server or the main logic board in a 3 Server requires replacement, remove the Address PROM from the old board and install it into the new board. On the solder side of the board will be a sticker with the complete network address printed on it. The Address PROM can be identified by a white sticker on the top of the chip with the later half of this network address printed on it. The new Address PROM will be placed into the old board and returned to repair. This will maintain the necessary hardware/software relation for proper system operation. On both boards, using a black permanent marker, block out the latter half (the part that matches the sticker on the Address PROM) of the network address. See Figure 1.

In the event that the Address PROM becomes defective, the system software will have to be re-installed to integrate the new network address.

Before

After

Figure 1.

 COPYRIGHT © 1989

DATE: June 9, 1989

REVISION DATE: June 9, 1989

BULLETIN NO: I/O:131

PRODUCT: 26-28Ø4 LP1ØØØ Laser Printer

SUBASSEMBLY: Entire Item

SUBASSEMBLY REVISION: N/A

PURPOSE: To alleviate high-temperature condition which may cause darkening of the right-hand paper edge on printed pages.

DISCUSSION:

Certain LP1ØØØ laser printers may produce printed pages which exhibit a darkening or blackened edge on the right hand side of the printout. Typically, this problem occurs only after the printer has been on for some period of time, although in some printers this may be a constant problem.

This condition can be caused by the buildup of excess toner in the bottom of the unit. However, it may also be caused by overheating of the toner in the development unit. In the latter case, toner may start to clump on the right hand end of the development roller; as these toner clumps are scraped off by the doctor blade within the development unit, they may cause the coating on that end of the development roller to peel off. This peeled portion of the roller then tends to deposit toner on the right hand side of the output, causing the darkening on the right-hand edge of the printed pages.

To prevent this toner overheating, a modification to improve the air flow in the printer must be added. This modification involves the addition of another fan fence in the lower portion of the printer. In some cases, it may also be necessary to replace the development unit, if the development roller is badly damaged on the right-hand edge.

PROCEDURE:

(1) Open the printer, and remove the development and cleaning/drum units from the bottom portion of the printer. Cover the drum with a few sheets of paper to prevent overexposure of the drum to light. Vacuum the lower portion of the printer thoroughly to remove any deposits of waste toner which may be present.

(2) Replace the development and cleaning/drum units in the bottom portion of the printer, being sure to seat them fully and properly into the unit. **Failure to install these units correctly is one of the chief causes of poor print quality in the LP1ØØØ!** Cover the exposed portions of the drum with a few sheets of paper to prevent overexposure to room light.

(3) With the cover of the printer still open, locate the main fan. This fan is located at the rear of the printer, to the left of the main motor assembly, in the top case. Immediately below the fan, locate the tan AC input assembly cover. There is a Mylar fan bracket seal present on this cover which seals the lower edge of the fan. The new fan fence will be installed so that the large adhesive tab is seated on the AC input cover and the small adhesive tab is seated on this Mylar fan bracket seal. Refer to Figure 1 for guidance.

Before removing the seals from the adhesive tabs on the new fan fence, check the positioning of the fence and compare it to the drawings in Figure 1 to be certain of correct placement. Once the positioning has been checked, remove the seals from the adhesive tabs and place the new fan fence in position.

(4) Close the printer, and run several pages of output with the printer cold. If right hand darkening exists on the output, check the printer again for waste toner deposits and remove any found. Recheck the output with the printer cold. If right hand darkening is still present, replacement of the development unit may be necessary.

(5) If the output is clean with the printer cold, let the printer warm up for at least one hour and then run ten to twenty pages of test output and verify that the output is still clean. If right hand darkening is present and the development unit has not been replaced previously, this may be an indication that damage is present on the development roller and replacement of the development unit may be necessary.

The fan fence may be ordered as:

Fan fence, part # HC-Ø296, catalog # 26-28Ø4

Figure 1

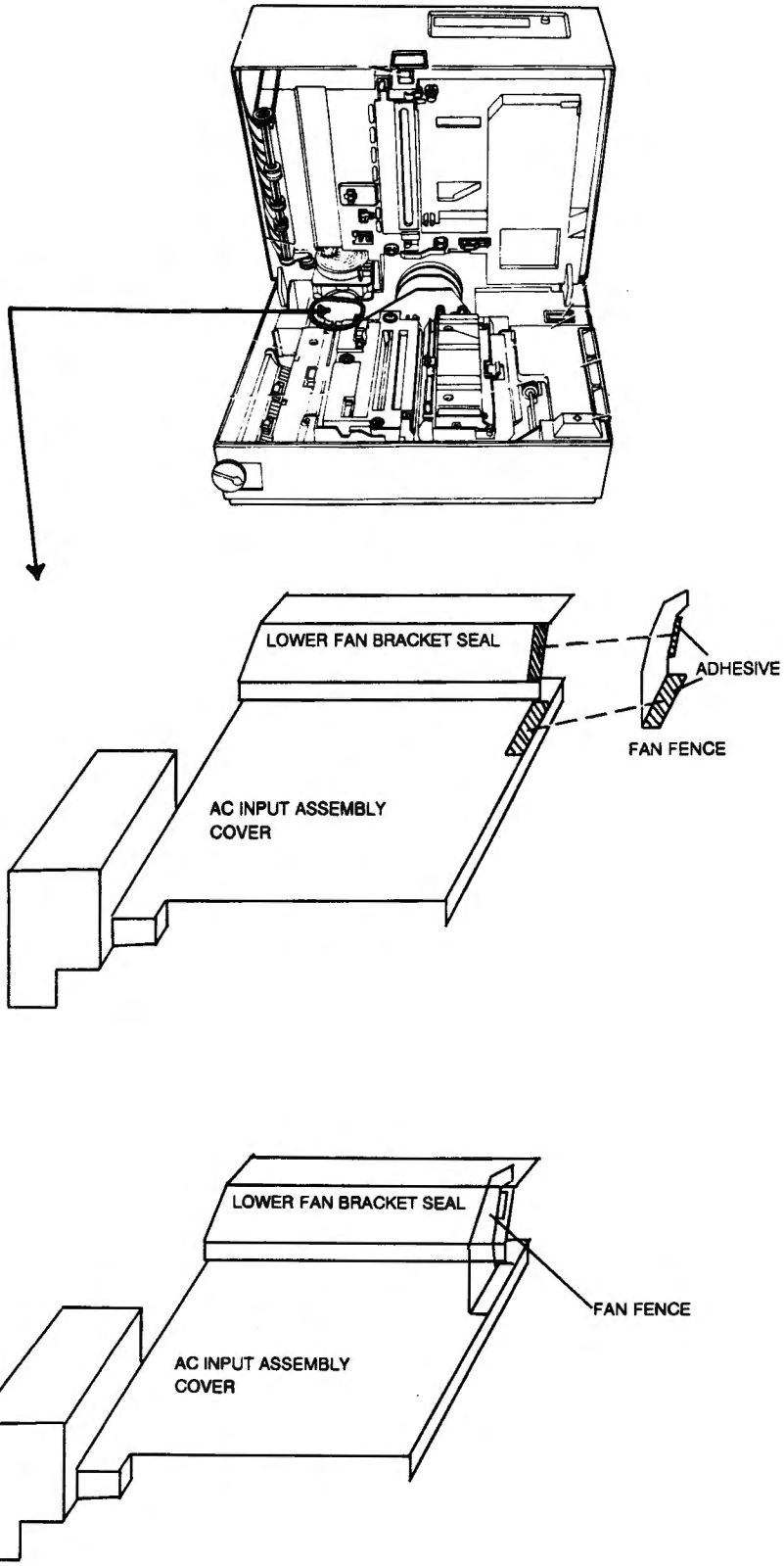
LOWER FAN BRACKET SEAL
ADHESIVE
FAN FENCE
AC INPUT ASSEMBLY
COVER
LOWER FAN BRACKET SEAL
FAN FENCE
AC INPUT ASSEMBLY
COVER

 COPYRIGHT © 1990

TANDY COMPUTER PRODUCTS

DATE: July 11, 1989

REVISION DATE: January 22, 1990

BULLETIN NO: I/O:132

PRODUCT: 25-4034 Tandy 3000 serial/parallel kit
25-5000/A Tandy 4000 serial/parallel board
25-5100 Tandy 4000LX serial/parallel board
25-4000/1/10/11 Tandy 3000 serial/parallel board

SUBASSEMBLY: AX-0205 serial/parallel board

SUBASSEMBLY REVISION: All

PURPOSE: To assure reliability of the serial/parallel PCB.

DISCUSSION:

In a previous version of this Technical Bulletin a procedure was outlined for the use of a GAL20V8A-25 IC as a substitution part for the PAL20L8ACN IC at location U15. The GAL20V8A-25 IC has been found to be unreliable as a substitution part. This revision of the Technical Bulletin is to disqualify the use of the GAL20V8A-25 IC and to insure that a PAL20L8ACN IC is installed at U15.

In the previous version of this Technical Bulletin a pull up modification was needed for the GAL IC, this modification will not cause a problem with the PAL IC and will not need to be removed.

PROCEDURE:

1) Remove the serial/parallel board from the computer.

2) Check the type of IC at location U15. If the part is a GAL20V8A-25 IC then remove the IC and install a PAL20L8ACN IC in position U15.

3) Reassemble the computer and test for proper operation using the appropriate software and diagnostics.

Parts for this modification are available as:

Description	Part number	Catalog number
PAL20L8ACN	MXP-0348	25-4034

 COPYRIGHT © 1989

TANDY COMPUTER PRODUCTS

DATE: July 2Ø, 1989

REVISION DATE: July 2Ø, 1989

BULLETIN NO: I/O:133

PRODUCT: DMP-3ØØ/21Ø2 26-2818/17

SUBASSEMBLY: Main Logic Board

SUBASSEMBLY REVISION: All Revisions

PURPOSE: Describe procedure for changing parallel interface jumpers.

DISCUSSION:

On the main logic board of the DMP-3ØØ and DMP-21Ø2 printers there are a set of jumpers which hardware configure the printer in the Tandy or IBM® modes. These jumpers are present to allow better hardware compatibility with IBM® or other compatible computers. When using the printer in the IBM® mode, on an IBM® machine you must use the IBM® cable.

The jumpers change several signals used on the parallel interface. They do not change the software modes provided by the printer. The signals effected are: INIT* / I-PRIME*, AUTOFEED*, SELECT IN*, SELECT* / BUSY*.

** **IMPLEMENT ON CUSTOMER REQUEST ONLY** **

PROCEDURE:

When configuring these jumpers refer to the following diagram.

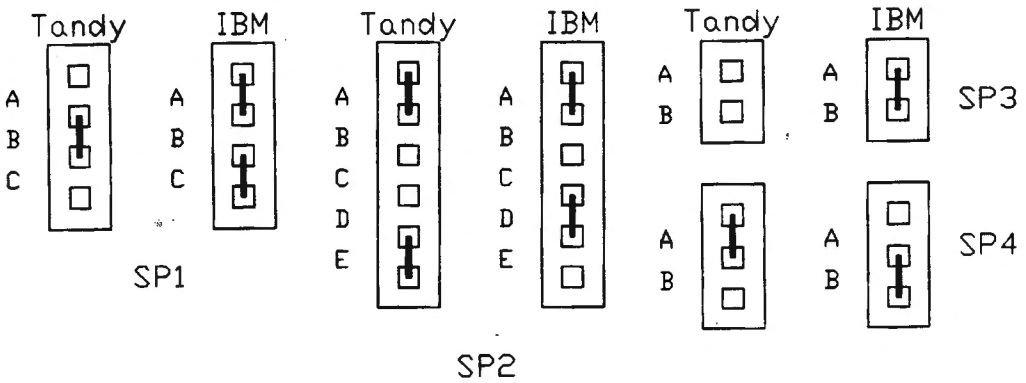

The definitions of the jumpers are as follows:

SP1 - A Grounds pin 33 (INIT*)
B Enables pin 33 to initialize the printer
C Enables pin 31 (I-PRIME*) to initialize the printer

SP2 - A Connects SELECT* input from printer logic to ground.
B Connects pin 36 (SELECT*) input to input of printer logic.
C Not ever used.
D Pulls pin 35 to +5Vdc through 3.3K resistor.
E Connects pin 18 (+5Vdc output) to +5Vdc.

SP3 - A Connected to pin 14 (AUTO FEED*) of the printer input.
B Connected to the AUTO FEED* input to the printer logic.

SP4 - A Connects and inverts BUSY to output BUSY* on pin 13 (BUSY*/SELECT).
B Connects and inverts SELECT* from printer logic to output SELECT on pin 13 (BUSY*/SELECT)

To move a jumper you must desolder the wire which connects the two points at the jumper location and reposition it.

Use care when moving these jumpers, the logic board is multi-layered and can be damaged easily.

PIN	SIGNAL	IN/OUT	DESCRIPTION
1	STROBE-N	IN	Samples input data when changing from low level to high level.
2	DATA BIT 1	IN	Input data: High level indicates "1" and low level "0".
3	DATA BIT 2	IN	
4	DATA BIT 3	IN	
5	DATA BIT 4	IN	
6	DATA BIT 5	IN	
7	DATA BIT 6	IN	
8	DATA BIT 7	IN	
9	DATA BIT 8	IN	
10	ACKNOWLEDGE-N	OUT	Indicates character input completion, or function operation end, at low level.
11	BUSY	OUT	Indicates data cannot be received at high level. Data can be input at low level.
12	PAPER END	OUT	High level indicates paper end.
13	BUSY-N	OUT	Indicates data cannot be received at low level. Data can be input at high level.
	(SELECT)	OUT	High level indicates select (online) condition.
14	AUTO FEED-N		(Note 3)
15	NC		
16	SG		Signal ground
17	FG		Frame ground
18	+5V		+5 V supply (50 mA maximum)
	(NC)		
19~30	SG		Twisted pair return (for pin No. 1 to 11)
31	NC		
	(INPUT PRIME-N)	IN	When this signal goes to the low level, printer controller is initialized. The low level should be held for more than 0.5 ms.
32	FAULT-N	OUT	This signal goes from high to low level when paper runs out. (Possible to indicate error).
33	INITIAL-N	IN	
	(OV)		
34	NC		
35	NC		
	(PULLED-HIGH)		Fixed to High (Connected to +5 V through 3.3 K)
36	SELECT IN-N		(Note 4)

Signals in the parentheses are used on IBM mode.

3: When the jumping wire is set in the SP3 A, the AUTO FEED-N (pin 14) is effective.

4: When the jumping wire is removed from the SP2 A and it is set in the SP2 B, the SELECT IN-N (pin 36) is effective.

 COPYRIGHT © 1989

TANDY COMPUTER PRODUCTS

DATE:	July 25, 1989
REVISION DATE:	July 25, 1989
BULLETIN NO:	I/O:134
PRODUCT:	25-1Ø37 24ØØ bps Modem Card
SUBASSEMBLY:	AXX-Ø234 24ØØ bps Modem Card
SUBASSEMBLY REVISION:	N/A

PURPOSE: To enable modem to go "ON HOOK" when remote modem drops carrier.

DISCUSSION:

Some modem cards may exhibit a problem of not going "ON HOOK" when the remote modem drops its carrier. Due to an error in the parts list some early production boards may be missing a resistor (R28). This resistor is needed to properly balance the impedance between transformer T1 and duplexer IC12.

If this resistor needs to be added then change the resistor value of R25 from 47Ø ohms to 45Ø ohms to compensate for the decreased transmit power by the addition of the 1ØK ohm resistor at R28. Refer to Figure #1 for locations of the affected components.

PROCEDURE:

1. Install R28 as 1ØK ohm 1/8 watt 1% resistor.

2. Change R25 from a 47Ø ohm 1/8 watt 1% resistor to a 45Ø ohm 1/8 watt 1% resistor.

3. Install the modem into a computer and test for proper operation. To test, call TECHCOMM or the MODEM TEST line using a software package such as DESKMATE so that you can monitor the response from the modem. If you connect with TECHCOMM type "q <ENTER>" to quit and wait for TECHCOMM to drop its carrier, or if you connect with the MODEM TEST line, wait approximately 3 minutes and it will drop its carrier automatically. If the modem responds with 'NO CARRIER' and the phone line returns with a dial tone, then it is working properly.

   Parts for this modification are available as:

1ØK ohm 1/8 watt 1% resistor	Part # N-Ø281BCE	Cat # 25-1Ø37
45Ø ohm 1/8 watt 1% resistor	Part # N-Ø166BBE	Cat # 25-1Ø37

UNIT PCB

Top View

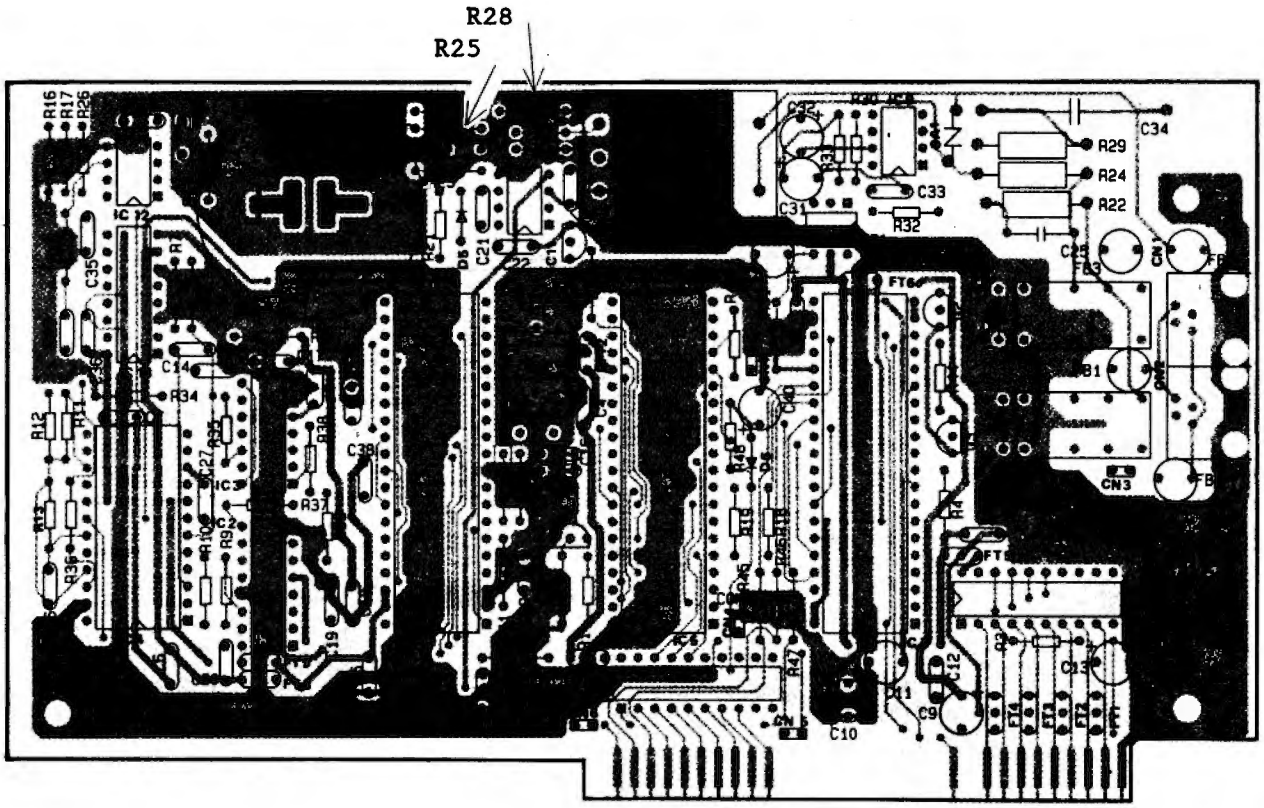

Figure #1

COPYRIGHT © 1992

TANDY COMPUTER PRODUCTS

DATE: August 14, 1989

REVISION DATE: January 2Ø, 1992

BULLETIN NO: I/O:135

PRODUCT: 26-28Ø4 LP1ØØØ Laser Printer

SUBASSEMBLY: Entire unit

SUBASSEMBLY REVISION: N/A

PURPOSE: To discuss common problems and solutions for the LP1ØØØ laser printer.

DISCUSSION: The following discussion will outline some common problems encountered with the laser printer and possible solutions to them.

The laser printer is nothing more than a dry copier in principle. An electric charge placed on the surface of a organic photoconductive drum (hereafter referred to as "OPC drum") is selectively discharged by a finely focused laser beam which scans across its surface. Those areas struck by the laser light become "charge holes" into which the dry toner will be attracted. In this way an image is built up on the drum. The image on the drum is transferred to the paper by using a voltage of opposite polarity and sufficient potential to draw toner from the drum surface to the paper. Heat and pressure are then used to fix the toner to the paper.

The first part of this bulletin contains a list of preventative maintenance checks and cleaning points. They are listed first and then explained in more detail. Following this are two sections on troubleshooting ideas. The first section contains important information from a hardware standpoint. The second section discusses software/operator considerations. Following this are three figures to show referenced points.

I. Preventative Maintenance Checklist - OPC/Development Unit Connection

A. Development Unit Drive Gear alignment - See page 174-175 of the service manual and/or Technical Bulletin I/O:144.

B. Spring loaded pressure plates that apply pressure on the right side of the Development Unit case. These can be seen more clearly when you **remove the Development Unit.** Make sure the springs are applying proper pressure towards the Development Unit when it is in place.

C. Processing Unit Case - This is the tray that the OPC Unit and Development Unit sit in. Check for warping and general seating of the two units. They should fit snugly together. See figure 3 item (12).

D. There are two pressure springs in the top case - The first one holds down the OPC towards the rear of the unit. The second one holds down the Development Unit towards the front of the unit. See figure 3 item (19).

E. Kit A consists of a drum and a cleaning kit. It has an orange clip that holds back the cleaning unit from the drum so damage will not occur during initial shipment. This clip should be removed when a new Kit A is installed. Failure to do this may cause latent images to appear on the printout that do not belong.

II. Preventative Maintenance Checklist - Cleaning points

A. Processing Unit Case - This is the case that the OPC Unit and the Development Unit sit in. Remove the two units and vacuum inside the case itself. Then lift up on the case and vacuum underneath it.

B. Development Unit - Remove the Development Unit and vacuum around the entire unit. **DO NOT** make contact with the toner roller itself, however, make sure to vacuum as close to it as you can.

C. Transfer Charge Corona Case - Remove the Transfer Charge Corona Case and vacuum underneath it.

D. Transfer Charge Corona Wire - Use the special tool provided with the printer. Refer to the owner's manual on pages 49 and 50 for a detailed procedure.

E. Main Charge Corona Wire - Use the special tool provided with the printer. Refer to the owner's manual on pages 52 and 53 for a detailed procedure.

F. OPC Unit high voltage contact points - There are several metal contact points that must be kept clean. Use 99% alcohol and cotton swabs. Refer to figure 1 for the exact location of these contact points.

G. Development Unit bias voltage contact point - At the rear of the unit is the Development Unit bias voltage contact. Check this and clean as necessary with 99% alcohol.

H. Fixing rollers/brush - Wait until they are cooled and clean as necessary. Do not clean them unless it is proven that they are dirty. See the isolation techniques discussed below on how to tell if they are in need of cleaning.

I. Preventative Maintenance Discussion - OPC/Development Unit Connection

A. Development Unit Drive Gear alignment - See page 174-175 of the service manual and/or Technical Bulletin I/O:144.

In order to achieve uniform results, the drum and toner roller must be in good alignment with each other. If either the Development Unit or the cleaning unit have been removed, it is essential that they be reseated properly in the processing unit case. If they are not close together, the result will be light printing. If they are not parallel, the printing will be darker on one side of the paper. Customers frequently have difficulty with this when they service either of these units. Be certain that the units seat together into their proper place.

There are at least three other things that affect this alignment that should be taken into consideration when servicing the printer. The Development Unit drive gear adjustment is detailed in the service manual beginning on page 174. This procedure can cure printers that print too light on one side or that print a black line at the top of the page. It requires a special set of tools that is available from Technical Support.

B. Spring loaded pressure plates that apply pressure on the right side of the Development Unit case. These can be seen more clearly when you remove the Development Unit. Make sure the springs are applying proper pressure towards the Development Unit when it is in place.

On the right hand side of the processing unit case there are two plastic spring loaded pressure plates. These pushers apply pressure to the side of the Development Unit forcing it towards the OPC Unit. If one or both of these are broken or dislodged, then the Development Unit won't be as close as necessary to insure proper print quality.

C. Processing Unit Case - This is the tray that the OPC Unit and Development Unit sit in. Check for warping and general seating of the two units. They should fit snugly together. See figure 3.

Finally, it is possible that the processing unit case itself may become defective. If it is not square, the OPC Unit or Development Unit will tend to be "squeezed out".

If these components need frequent reseating, then the processing unit case should be suspect. Finally, check that both sides of the processing unit case hinge are seated correctly on their respective pins, and that it is fully seated and latched into the printer.

D. There are two pressure springs in the top case; the first one holds down the OPC towards the rear of the unit. The second one holds down the Development Unit towards the front of the unit. See figure 3.

There are several connection points on the underside of the top half of the printer that must make good contact with the OPC and development assemblies. Refer to figure 1 for detail. This figure illustrates the location of each of these points and their relation to each other. Not only must they have good mechanical connection, but they must also be cleaned to insure a good electrical connection. Figure 2 shows similar detail on the Development Unit. The grounding terminal for it meshes with a clip on the processing unit case. The development bias terminal (see figure 2 item (D)) mates with item (16) on figure 3.

In addition to these there are also mechanical interfaces which need to be secure. Refer to figure 3. Item (15), the toner end sensor, must engage with the mechanism on the Development Unit that will trip it when toner is low. Adjacent to this (just to the left between the charge voltage terminal and the development bias voltage terminal) is a chrome leaf spring. This spring presses down against a white lever which extends from the Development Unit. When the case is closed this spring and lever form a Development Unit lock that engages the Development Unit stopper shaft to prevent movement of this assembly. If the white lever or spring is loose, broken, or bent the result may be printouts that alternate between light and dark.

E. Kit A consists of a drum and a cleaning kit. It has an orange clip that holds back the cleaning unit from the drum so damage will not occur during initial shipment. This clip should be removed when a new Kit A is installed. Failure to do this may cause latent images to appear on the printout that do not belong.

II. Preventative Maintenance Discussion - Cleaning Points

Processing Unit Case - This is the case that the OPC Unit and Development Unit sit in. Remove the two units and vacuum inside the case itself. Then lift up on the case and vacuum underneath it.

The purpose of this is to provide a toner free paper path. If toner is not cleaned from this area, it will pile up and attach itself to the paper as it travels through the paper path causing streaks and blotches to occur on the paper.

Also, with the OPC and Development Unit removed, clean off the quenching lamp LEDs located below the OPC Unit.

B. Development Unit - Remove the Development Unit and vacuum around the entire unit. **DO NOT** make contact with the toner roller itself, however, make sure to vacuum as close to it as you can.

On some machines the Development Unit may gradually manifest a hole which will allow toner to drop onto the paper. This will produce splotches or black streaks. Occasionally the spreader blade will allow toner to pile up at either end of the development roller. When enough toner piles up, it may fall to the paper or the bottom of the case in clumps. Clumping may also occur if the machine is operated in an environment where the humidity exceeds 8Ø percent for more than a few hours at a time, or in situations where the printer sits unused for long periods. Toner clumps or paper dust can also become jammed between the development roller and the spreader blade. If this occurs toner will no longer be spread evenly and printouts will turn out with white vertical bands where the toner can't reach.

C. Transfer Charge Corona Case - Remove the Transfer Charge Corona Case and vacuum underneath it.

When cleaning around the transfer charge wire, don't forget to remove it and clean underneath it. Also insure that the springs that make contact with the bottom of the transfer assembly have good tension.

D. Transfer Charge Corona wire - Use the special cleaning tool provided with the printer. Refer to figure 4 for the location of this cleaning tool. Remove the Development Unit and OPC Unit. Insert the cleaning tool into the Transfer Charge Corona wire cartridge as shown in figure 5 and gently move it across the width of the Transfer Charge Corona wire.

Make sure that the thin corona wire is in place. It is difficult to see. If it is broken, the transfer charge will not be present, so toner will not be attracted away from the OPC Unit, resulting in a blank printed page (no image at all).

E. Main Charge Corona wire - Use the special cleaning tool provided with the printer. Refer to figure 4 for the location of this cleaning tool. Insert the cleaning tool into the OPC Unit as shown in figure 6 and move it gently across the width of the OPC Unit.

Make sure that the thin corona wire is in place. It is difficult to see. If it is broken, the OPC Unit will not be charged at all, resulting in a black printed page.

F. OPC Unit high voltage contact points - There are several metal contact points that must be kept clean. Use 99% alcohol and cotton swabs. Refer to figure 1 for exact location of these contact points.

If these contacts are dirty, improper voltages will be present on the OPC Unit causing various image problems ranging from dark printing to light printing to no image at all.

G. Development Unit bias voltage contact point - At the rear of the unit is the Development Unit bias voltage contact. Check this and clean as necessary with 99% alcohol.

If these contacts are dirty, improper voltages will be present on the Development Unit causing various image problems ranging from dark printing to light printing to no image at all.

H. Fixing rollers/brush - Wait until they are cooled and clean as necessary. Do not clean them unless it is proven that they are dirty. See the isolation techniques discussed below on how to tell if they are in need of cleaning.

If the printer should stop or jam during operation, the paper inside may become stuck. If the paper has partially exited, the customer may attempt to pull it on through by hand. The paper may tear, leaving scraps of paper blocking the paper path, causing subsequent jam indications to occur. Also, this could cause loose unfixed toner to be deposited on the fixing rollers which will produce streaks and spots in subsequent printouts. Cleaning the rollers with alcohol will usually solve this problem. Be sure to wait until the fixing section has cooled before attempting to perform any work on it.

```
*************************************************
*                     WARNING                   *
*                                               *
* During normal operation this roller is kept   *
* at a temperature of between 325 and 340       *
* degrees F.  You can receive serious burns if  *
* you are not mindful of this fact.             *
*                                               *
*************************************************
```

III. Troubleshooting - Hardware Considerations

A. Blotches on print - To help isolate where unexpected marks on a printout originate, run a self test print and turn off the printer during the print cycle.

If the unwanted image appears on the paper before the fixing section, then the fixing section could be ruled out.

If the unwanted image appears on the drum, then the drum/laser section should be checked.

If the unwanted image appears on the paper but not on the drum, the Development Unit should be cleaned, reseated, and another self test print run to see if the print problem is still present.

B. Horizontal banding problems - These can be associated with improper voltages along the distribution path of the high voltage to the OPC drum. This path starts with the Charge/Bias Power Supply contacting the drum charge corona wire. The charge corona runs the length of the OPC Unit, and then connects to a contact that goes into the upper case to a zener diode assembly board. This zener diode assembly board properly biases the charge voltage applied to the drum. Check this path for proper contacts. Also, try substituting the Charge/Bias Power Supply, Kit A (OPC Unit), and the zener diode assembly board to further isolate/eliminate the problem.

C. Darker image on right hand side - Some printers exhibit darkening along the right hand edge of the paper caused by overheating of the toner in the Development Unit. Additional baffling is required to improve air flow inside the machine. See Technical Bulletin I/O:131 for specifics.

D. Light streaks may be a result of dirt on the removable lens that comes new with a Kit A. Try sliding this lens out and wiping or air blowing it clean.

E. Beware of cold solder joints on the Engine Drive board power supply. If these are bad, symptoms can range from erratic operation to no operation at all.

F. Early samples of the LP1ØØØ exhibited a curious racket that was often described as a scraping or moaning noise. The root of this problem was the cleaning blade in the OPC Unit. This blade is used to remove any leftover toner from the drum surface before it rotates around past the main charge wire. Vibration of the blade produced the noise described. Replacement of the OPC Unit is required to fix this problem. Refer to Technical Bulletin I/O:117 for details. Be certain that the green latches that secure the OPC drum into the cleaning unit are set. Otherwise the drum will fall out when the cleaning unit is removed. **Cover the OPC drum anytime it is exposed to light.** Room light will diminish the photoelectric properties of the drum in proportion to the intensity and duration of exposure.

Never expose the drum to direct sunlight. It is sure to be ruined.

G. Printing tests - Three tests are listed here.

1. Self test - Toggle the On Line/Off Line switch to Off Line status and then push the Test button. This will produce a text printout of current printer specifications, including available fonts, ROM version, etc.

2. 8 x 8 Dot Test - To execute this test, locate the Engine Drive Board and turn switch SW1-5 to the on position. Turn the power on and depress SW2.

3. Grey scale test - The following basic program when run will print out a 40% grey scale on the paper. The printer must be in HP Laserjet mode for the program to work properly.

```
10 WIDTH LPRINT 255
20 LPRINT CHR$(27);"*p30X";:'
30 LPRINT CHR$(27);"*p30Y";:'30 dots from top edge
40 LPRINT CHR$(27);"*c3000A";:'print 3000 horizontal dots
50 LPRINT CHR$(27);"*c3500B";:'print 3500 vertical dots
60 LPRINT CHR$(27);"*c40G";:'pattern defined as 40% grey
70 LPRINT CHR$(27);"*c2P";:'print grey pattern
80 LPRINT CHR$(12);:'form feed
90 LPRINT
```

NOTE: Upper and lower case is important for the commands within the quotes! Type the program exactly as shown.

IV. Troubleshooting - Software/Operator Considerations

A. There are a number of problems when printing that will occur because of the version of firmware in the printer. The current version is 3.0.3. If the customer is having problems with printing from specific software packages rather than problems in general, this would be a suspect area. The checksums for the 3.0.3 chips are as follows:

Location	RS Part #	Description
U48 - F6F1	MXP-0508	ROM Firm 4L
U49 - EAB3	MXP-0509	ROM Firm 4H
U50 - ADE3	MXP-0510	ROM Firm 3L
U51 - 9EF6	MXP-0511	ROM Firm 3H
U52 - 1498	MXP-0512	ROM Firm 2L
U53 - A6F2	MXP-0513	ROM Firm 2H
U54 - 75EE	MXP-0514	ROM Firm 1L
U55 - B52F	MXP-0515	ROM Firm 1H

Version 3.0.3 consists of the following ICs:

ICs 50, 51, 54, & 55 are changed to 3.0.3
ICs 52, & 53 are unchanged from version 3.0.0
ICs 48, & 49 are unchanged from version 3.0.2

B. Never overlook operator error as a source of trouble. If the paper size control on the front panel of the machine is not set correctly, the printer will generate paper size errors all day long even though there is nothing wrong with it. If the dip switches on the back (next to where the parallel input connects) are set incorrectly, the printer will appear completely dead. Standard configuration is switch 1 on, 2, 3, and 4 off. Standard copier bond paper must be used. Textured paper (e.g. parchment) types will not provide satisfactory results. Slamming the top down may cause the mechanism that operates the shutter for the laser beam to become jammed or broken.

More detailed information is provided in the specifications section on page 205 of the owners manual and on page 2 of the service manual.

Also, be sure to check the printer mode information stored in nonvolatile memory. The procedure for checking and changing these printer mode settings are described in the service manual beginning on page 297.

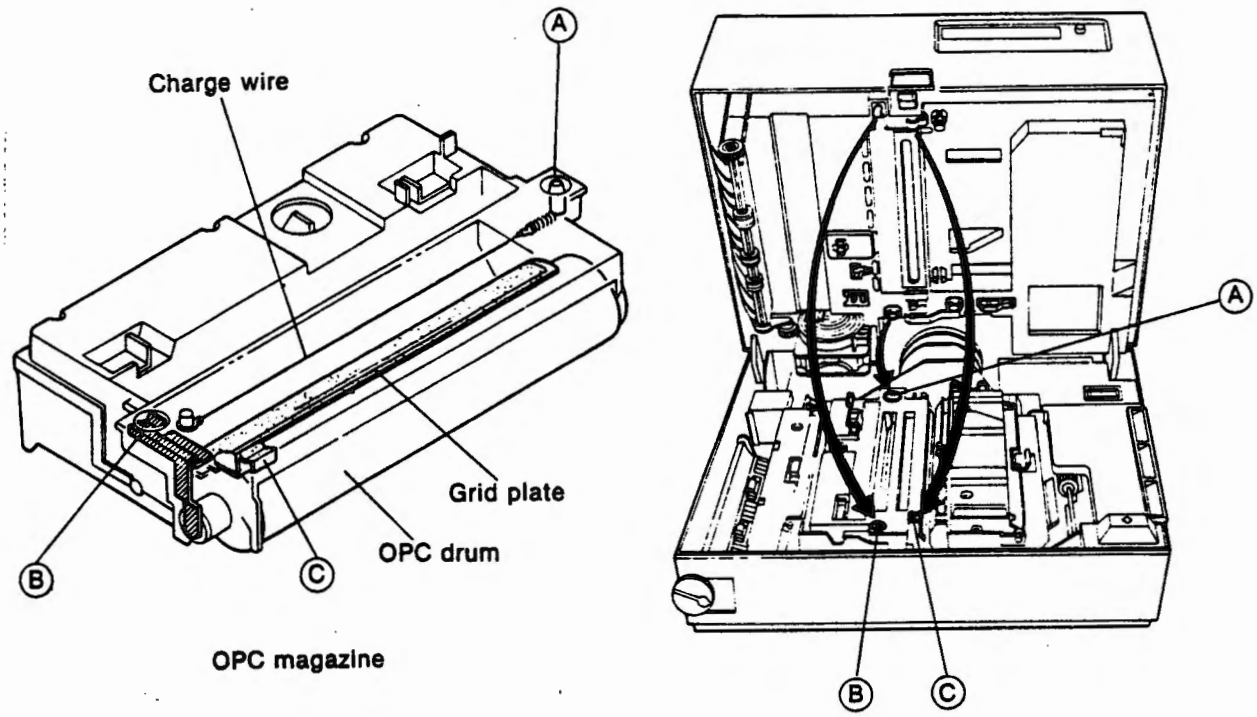

Figure 1

A) High Voltage Terminal
B) OPC Base Terminal
C) Grid Plate Terminal
D) Bias Voltage Terminal

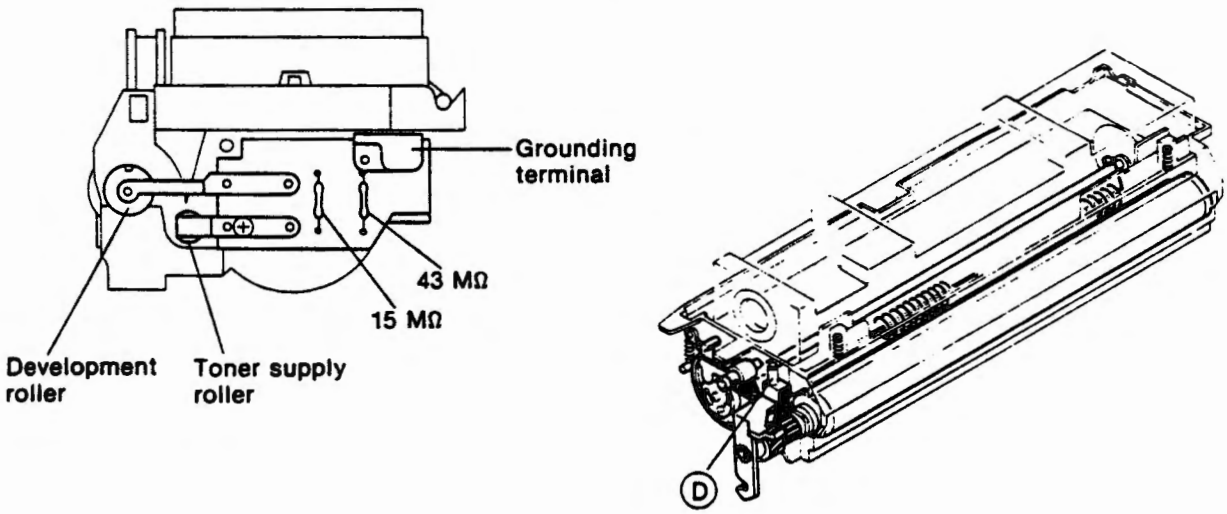

Figure 2

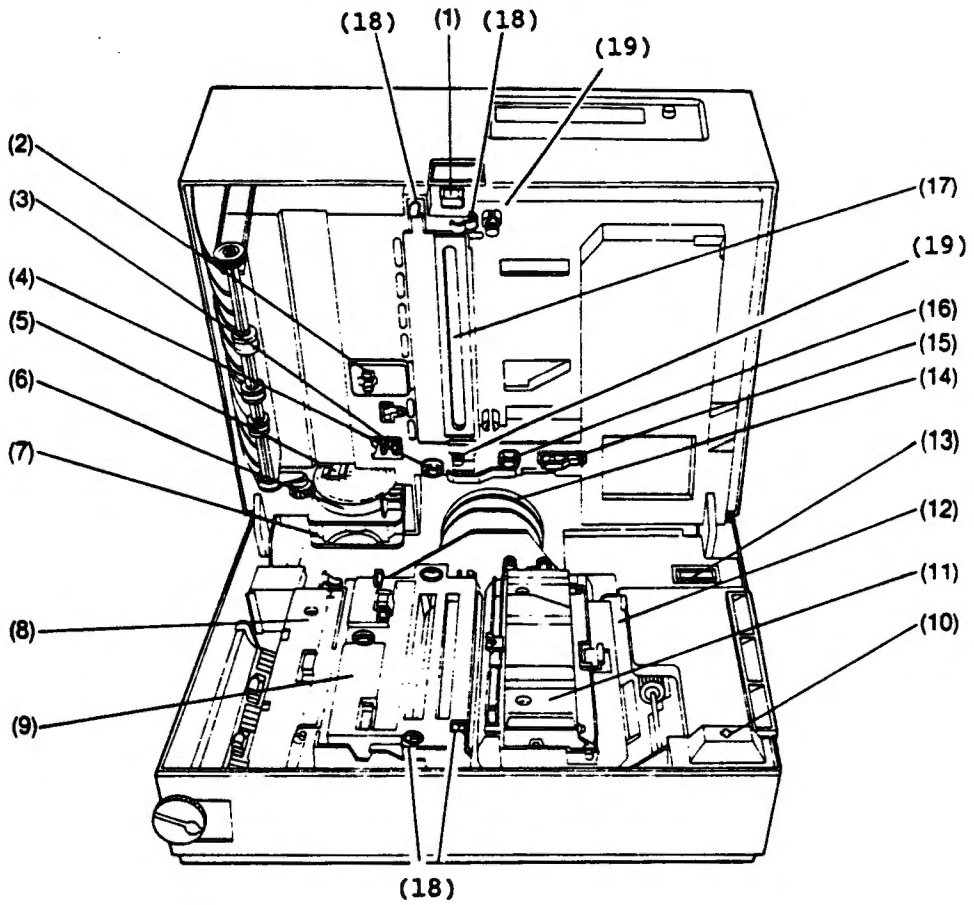

Figure 3

(1) Shield plate
(2) Toner overflow sensor
(3) Type sensor
(4) Charge voltage terminal
(5) Reset lever
(6) Ozone filter
(7) Fan
(8) Fusing cover
(9) OPC magazine (cleaning unit)
(10) Interlock switch
(11) Development unit
(12) Processing unit case
(13) Print counter
(14) Main motor
(15) Toner-end sensor
(16) Development bias voltage terminal
(17) Laser beam shutter
(18) OPC voltage terminals
(19) Top case pressure springs

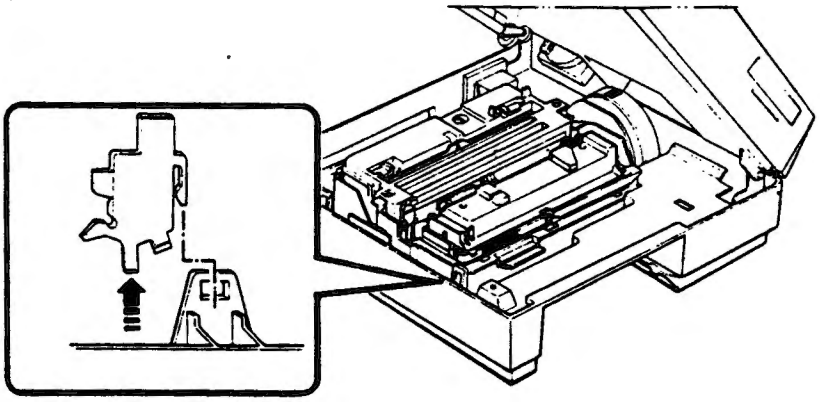

Figure 4

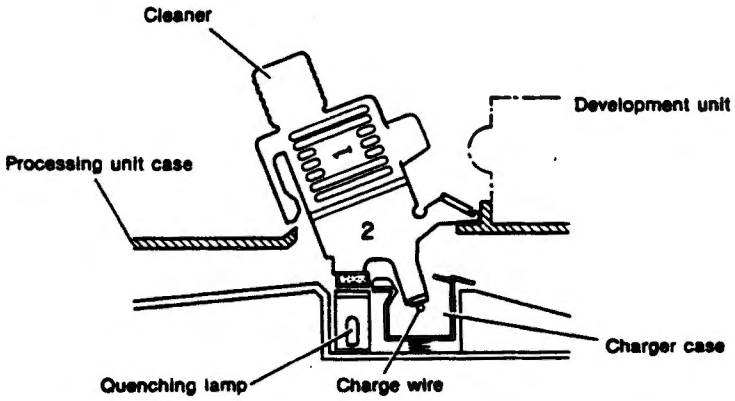

Figure 5

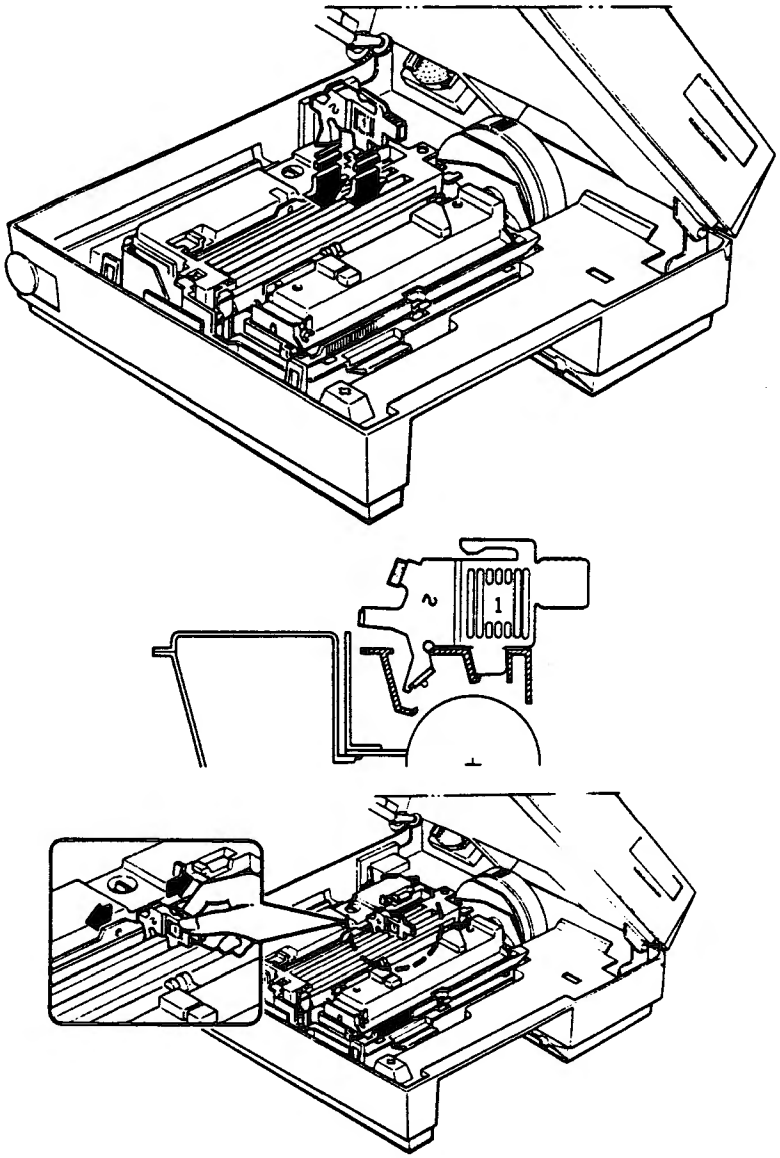

Figure 6

 COPYRIGHT © 1990

TANDY COMPUTER PRODUCTS

DATE: December 4, 1989

REVISION DATE: January 2, 1990

BULLETIN NO: I/O:136

PRODUCT: 25-4032 Enhanced Keyboard

SUBASSEMBLY:

SUBASSEMBLY REVISION:

PURPOSE: Adding an additional spring to keyboard keys to stop them from sticking, binding or not working.

DISCUSSION: On the 25-4032 enhanced keyboard several of the keys are larger than the standard alpha-numeric keys. These keys may bind after being depressed and may not return to their normal position when released. These keys are: LEFT SHIFT, RIGHT SHIFT, BACKSPACE, ENTER, and on the number pad: ENTER, 0, +, keys. The binding has been traced to an extra post under the keycap. The keyswitch has an internal spring used to return the key to its normal position, while the post is used as a guide and has no spring. The pressure on only half of the keycap may cause it to bind occasionally on the post. Adding an additional spring to the post will cause the keycap to return to its normal position without binding.

This modification only needs to be completed if the customer is complaining about the keys sticking, binding or not working. The problem is most noticeable on the 0 and ENTER keys on the number pad.

PROCEDURE: With a wide flat blade screwdriver gently pry up on the keycap to remove it. Use caution not to damage the keyboard case or the keycap. Verify that no damage or other possible cause of a binding key are present. Place a spring onto the unused key support post and replace the keycap. Test the key for free up and down movement. With the spring added it will take slightly more pressure to depress the key.

PARTS LIST:

Description	Part #	Catalog #
Spring 3.0oz	ARB-7777	26-4005

 COPYRIGHT © 1989

DATE:	December 1, 1989	
REVISION DATE:	December 1, 1989	
BULLETIN NO:	I/O:137	
PRODUCT:	9Ø-2Ø6Ø	Archive Scorpion Tape Drive
	9Ø-2Ø59	Archive FastTape Tape Drive
SUBASSEMBLY:	AX-Ø245	"Short" tape drive interface board
	AX-Ø253	"Long" tape drive interface board
SUBASSEMBLY REVISION:	AX-Ø245, SC499	
	AX-Ø253, SC499R	

PURPOSE: To explain the procedure for exchanging a "long" tape drive interface board for a "short" board.

DISCUSSION:

There are two types of Archive tape drive interface boards sold with the Scorpion and FastTape tape drives, the AX-Ø245 "short" SC499R interface board and the AX-Ø253 "long" SC499 interface board. The "long" interface board is no longer being manufactured by Archive, creating occasional shortages in the exchange board pipeline which may result in backorders for the "long" board.

A service center may request that a short board be substituted for a long board when a long board is on backorder if they have obtained the customer's approval. The customer must be advised that this is not a "like-for-like" exchange; the long board is jumpered differently than the short board. Also, in the case of use in the SCO Xenix SysV/386 environment, a short board used as a replacement for a long board must have new drivers installed to work properly.

If a short board is installed in place of a long board, you must verify that the jumpers are correct, correctly install new tape drivers (if on an SCO Xenix system), and provide the customer with documentation for the new board and a diskette containing the new drivers.

PROCEDURE:

(1) Remove the old "long" SC499 interface board from the CPU.

(2) Check the jumper configuration on the new, "short" SC499R interface board.

For use in an MS-DOS environment:
KK, 45MB, Q24, ADDR CMP 3, ADDR CMP 4, ADDR CMP 6, ADDR CMP 7, ADDR CMP 8, ADDR CMP 1Ø, IRQ3, DRQ1, DACK1

This configures the board for operation at port address Ø22ØH, interrupt request 3, DMA request 1, and DMA acknowledge 1.

For use in an SCO Xenix SysV/386 environment:
KK, 45MB, Q24, ADDR CMP 3, ADDR CMP 4, ADDR CMP 6, ADDR CMP 7, ADDR CMP 8, ADDR CMP 1Ø, IRQ3, DRQ3, DACK3

This configures the board for operation at port address Ø22ØH, interrupt request 3, DMA request 3, and DMA acknowledge 3.

(3) Install the new "short" SC499R interface board into the CPU. Be careful to maintain correct pin 1 to pin 1 cable orientation from the tape drive to the interface board.

(4) **If the tape drive is being used with SCO Xenix SysV/386 version 2.2.4,** upgrade the tape drivers as shown in the following procedure. (For additional guidance on SCO Xenix, refer to the **SCO Xenix 386 Installation Guide** published by Technical Support).

Remove The Old Tape Drivers:

(a) Turn the computer on. After the BIOS ROM message and memory size tests, you should see something like this:

```
XENIX System V

Boot
:
```

At this point, press **<ENTER>**.

(b) The screen should now display:

hd(4Ø) xenix

Additional boot diagnostic messages will be displayed, and eventually this message will appear:

Enter CONTROL-d to proceed with normal startup
(or give root password for system maintenance)

At this point, press:

<CTL><d>

The system will prompt you for the date and time. Press **<ENTER>** to take the current value.

After a few more seconds, a login prompt similar to this will appear:

xenix386!login:

(Note that the login prompt may vary from system to system).

(c) Login as root. If the the customer has assigned a root password, you will be prompted for it by:

Password:

When you have successfully logged in, you will be greeted with a prompt:

#

(Note that the root prompt may vary from system to system).

(d) Once the root prompt appears, type:

mkdev tape<ENTER>

The system should next display:

1. Install Cartridge Tape Driver
2. Remove Cartridge Tape Driver
3. Install Mini-Cartridge Tape Driver
4. Remove Mini-Cartridge Tape Driver

Select an option or enter q to quit:

You want to remove a cartridge tape driver, so type:

2<ENTER>

(e) The system should respond with this menu:

```
Select an option
        1. Standard QICØ2 Tape
        2. SCSI Tape

Enter '1', '2' or 'q' to quit:
```

In this case, we are dealing with a "standard" tape drive, so type:

1<ENTER>

At this point, the system will check for the presence of the link kit. If it is not installed, you will be informed, and asked if you wish to install it. You should answer "yes", and follow the prompts, since you will not be able to complete the new tape driver installation otherwise.

If the link kit software is installed, the system will respond with:

```
Would you like to remove the associated devices (y/n)
```

You do want to remove the devices associated with the tape drive, so type:

y<ENTER>

The system will display:

```
Updating system configuration.
Removing tape driver.

        1. Install Cartridge Tape Driver
        2. Remove Cartridge Tape Driver
        3. Install Mini-Cartridge Tape Driver
        4. Remove Mini-Cartridge Tape Driver

Select an option or enter q to quit:
```

(f) At this point, we will quit, so type:

q<ENTER>

The system will respond with:

> You must create a new kernel to effect the driver change you specified. Do you wish to create a new kernel? (y/n)

We want a new kernel to be created, so answer:

y<ENTER>

(g) You will next see:

> Re-linking the kernel ...
> Kernel with tape drive modification(s) is in /usr/sys/conf/xenix
> Do you want this kernel to boot by default? (y/n)

This should be the default kernel, so type:

y<ENTER>

(h) The system should eventually display:

> The new kernel is installed in /xenix.
> Reboot your system to activate it.

and the root prompt should reappear.

Installing the New Tape Drivers:

(a) When the root prompt has reappeared, insert the diskette containing the tape drive update programs into floppy drive Ø, and type:

/etc/install<ENTER>

The system will respond with:

For each volume in the distribution set, insert the floppy into the drive, enter 'y', and press <RETURN>. Enter the letter 'n' after the last volume.

Should you see the message 'tar: please mount new volume', insert the next floppy, and press <RETURN>.

First floppy? (y/n)

Ensure that the floppy disk is correctly installed in the drive, and type:

y<ENTER>

You will see:

Extracting files...

then:

1. Install Cartridge Tape Driver
2. Remove Cartridge Tape Driver
3. Install Mini-Cartridge Tape Driver
4. Remove Mini-Cartridge Tape Driver

Select an option or enter q to quit:

The Scorpion Tape Drive is a "full-size" driver, so since we wish to install the driver, type:

1<ENTER>

(b) The system will respond with:

Select an option
1. Standard QICØ2 Tape
2. SCSI Tape

Enter '1', '2' or 'q' to quit:

This is a "standard", rather than an SCSI tape device, so type:

1<ENTER>

The system will reply:

Configuring driver.

(c) Next, you will see this menu:

QIC Cartridge Tape Configuration

1. Display current tape parameters
2. Modify current tape parameters
3. Select previous tape parameters
4. Select default tape parameters

Enter an option or 'q' to quit:

To display what parameters are currently set for the tape drive, press:

1<ENTER>

You will probably see something like this:

Tape Parameters	Values	Comments
1. Controller Type	Ø	1 = type A, 3 = type W, 4 = type E
2. DMA Channel	Ø	1 or 3
3. Interrupt Vector	Ø	logical vector number
4. Base Address	ØH	i/o addresses start here

Zero Values Imply Auto-Configuration

and the menu will reappear:

1. Display current tape parameters
2. Modify current tape parameters
3. Select previous tape parameters
4. Select default tape parameters

Enter an option or 'q' to quit:

(d) The values which must be present for the Scorpion Tape Drive are controller type 1, DMA channel 3, interrupt vector 3, and I/O address Ø22ØH. **Auto-configuration will not work with this drive! Even if the parameters appear ok, you should re-enter this information.** Therefore, to set these values, press:

2<ENTER>

You will see a screen with the current parameters, and a prompt:

Tape Parameters	Values	Comments
1. Controller Type	Ø	1 = type A, 3 = type W, 4 = type E
2. DMA Channel	Ø	1 or 3
3. Interrupt Vector	Ø	logical vector number
4. Base Address	ØH	i/o addresses start here

Zero Values Imply Auto-Configuration

Enter a parameter to modify or 'q' to return to the main menu:

Change the controller type first by pressing:

1<ENTER>

You will be prompted:

Hexadecimal values may be entered with a trailing 'H'.
For example, ØxØ3ØØ would be entered Ø3ØØH.
Enter the new value or <RETURN> to use the existing value:

We want controller type 1, so answer with:

1<ENTER>

Similarly, to correct the DMA channel, press:

2<ENTER>

then, when prompted,

3<ENTER>

To change the interrupt vector, press:

3<ENTER>
3<ENTER>

and finally, to set the correct I/O address, type:

4<ENTER>
Ø22ØH<ENTER>

To get back to the previous menu, type:

q<ENTER>

and the selection menu should reappear:

```
1. Display current tape parameters
2. Modify current tape parameters
3. Select previous tape parameters
4. Select default tape parameters

Enter an option or 'q' to quit:
```

(e) To verify that you set the values correctly, select option 1 again by pressing:

1<ENTER>

You should now see:

Tape Parameters	Values	Comments
1. Controller Type	1	1 = type A, 3 = type W, 4 = type E
2. DMA Channel	3	1 or 3
3. Interrupt Vector	3	logical vector number
4. Base Address	Ø22ØH	i/o addresses start here

Zero Values Imply Auto-Configuration

and the menu will reappear:

```
1. Display current tape parameters
2. Modify current tape parameters
3. Select previous tape parameters
4. Select default tape parameters

Enter an option or 'q' to quit:
```

(f) If the values shown are correct, type:

q<ENTER>

to continue with the installation. If they are not correct, you may use the "Modify current tape parameters" selection to correct whatever is wrong.

The installation menu will reappear:

1. Install Cartridge Tape Driver
2. Remove Cartridge Tape Driver
3. Install Mini-Cartridge Tape Driver
4. Remove Mini-Cartridge Tape Driver

Select an option or enter q to quit:

Press:

q<ENTER>

to exit and reconfigure the kernel.

You will see:

You must create a new kernel to effect the driver change you specified. Do you wish to create a new kernel now? (y/n)

We want the new kernel, so type:

y<ENTER>

The system will respond:

Re-linking the kernel ...
Kernel with tape drive modification(s) is in /usr/sys/conf/xenix
Do you want this kernel to boot by default? (y/n)

This should be the default kernel, so enter:

y<ENTER>

The system will respond with:

The new kernel is installed in /xenix.
Reboot your system to activate it.

(g) You will next get a message which says:

Next floppy? (y/n)

Type:

n<ENTER>

The system will respond with:

Installation Complete.

and the root prompt will return.

(h) At this point, we must reboot the system. Type:

shutdown Ø<ENTER>

Eventually, you should see this message:

```
** Normal System Shutdown  **

**    Safe to Power Off    **
            - or -
** Press Any Key to Reboot **
```

(i) Press any key to reboot the system, and when the system displays the Xenix boot prompt, follow steps (a) and (b) under **Remove The Old Tape Drivers** to bring up Xenix.

Testing the New Board and Drivers:

(a) Once you have rebooted the system, log in as root.

(b) Install a tape into the tape drive unit. You will first test the drive by retensioning a tape; to do this, once the tape is in place, type:

tape reten<ENTER>

This will retension the tape, a good idea with new tapes, and all tapes after a few hours of use. You should hear the drive activate as your prompt returns.

(c) To check the tape drive out further, you will use the **tar** command. Once the drive has stopped, type:

tar -cvf /dev/rctØ /etc<ENTER>

This will make a save of the /etc directory to the tape drive (referred to as /dev/ctØ or /dev/rctØ). When the root prompt has returned, to check that the save was made, type:

tar -tvf /dev/rctØ<ENTER>

This should produce a listing of the files on the tape which we just saved. If all of this works, the odds are fairly good that the tape drive is functional. **If you have any difficulties with the tape drive**, recheck the interface board jumpers, and if necessary, restart the software installation at the **Remove the Old Tape Drivers** step. Do not hesitate to call Technical Support if you have questions or problems.

(5) Once the tape drive has been tested under the appropriate operating system (either Xenix or MS-DOS), return the unit with the new tape drive interface board documentation and Xenix driver disk to the customer. The board documentation and driver disk will be provided by Business Products Parts with each "short" board used for this type of exchange.

TANDY COMPUTER PRODUCTS

DATE: February 8, 1990

REVISION DATE: February 8, 1990

BULLETIN NO: I/O:138

PRODUCT: 26-2817 DMP-2102 Printer
26-2818 DMP-300 Printer

SUBASSEMBLY: XB-2591 Late Style Power Supply PCB

SUBASSEMBLY REVISION: PC Board Part # PU4057-3311

PURPOSE: Schematic for a late style power supply.

DISCUSSION: There is a late style power supply being used in DMP-2102 and DMP-300 printers. The following table shows the difference between the original style power supply and the late style power supply.

Description	Radio Shack Part #	PC Board Part # (found on the component side of the PCB)
Original style power supply	XB-2515	PU4057-3219
Late style power supply	XB-2591	PU4057-3311

The schematic for original style power supply is included in the original service manual. The schematic for the late style power supply is provided on the next page.

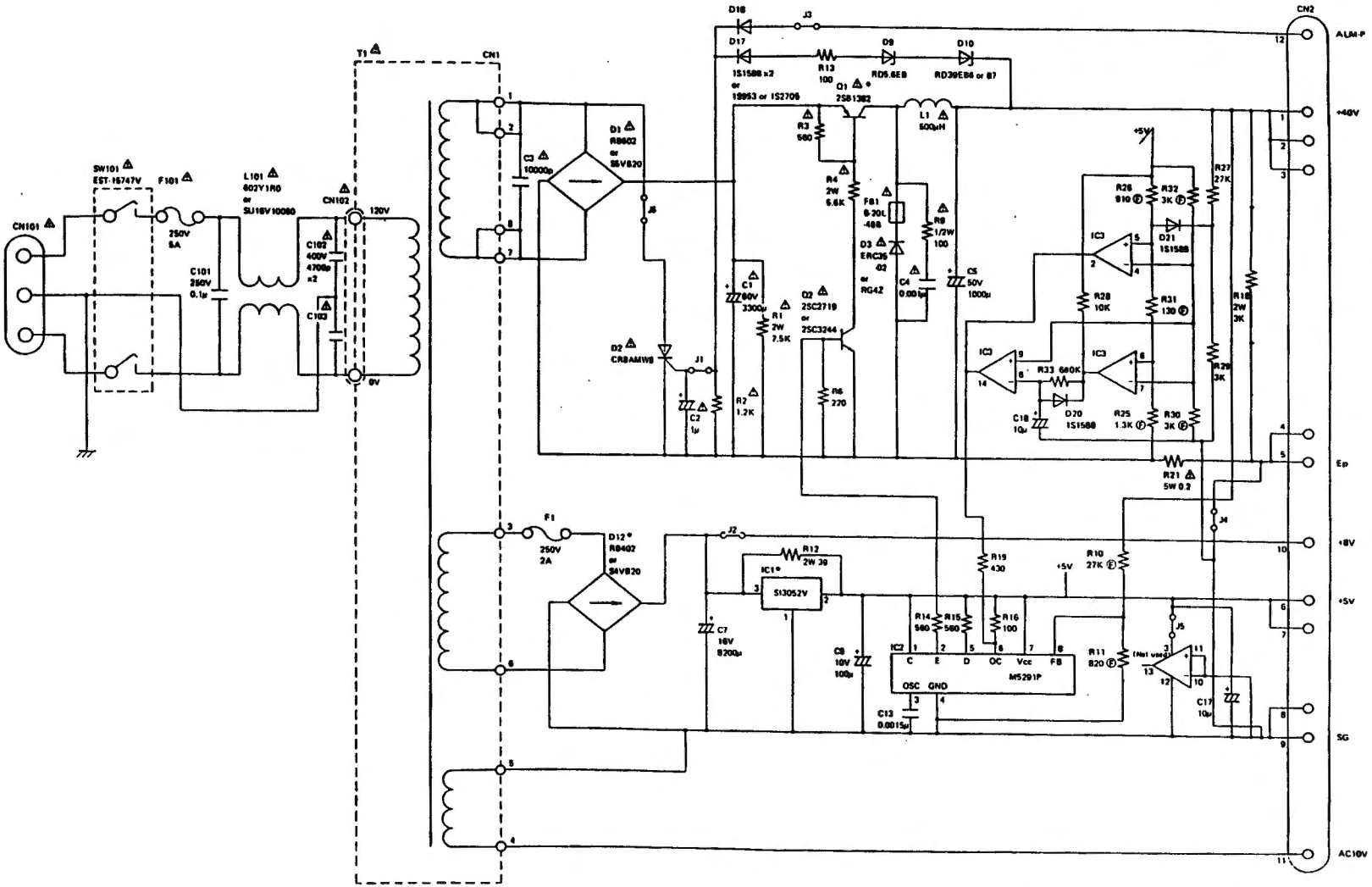

NOTE: RESISTOR VALUES ARE IN [Ω] UNLESS OTHERWISE SPECIFIED.
CAPACITOR VALUES ARE IN [μF] UNLESS OTHERWISE SPECIFIED.
* WITH HEAT SINK.

TANDY COMPUTER PRODUCTS

DATE: April 16, 1990

REVISION DATE: April 16, 1990

BULLETIN NO: I/O:139

PRODUCT: 25-1018 1200-bps PLUS Card Modem.

SUBASSEMBLY: AX-0149 Main Logic Board

SUBASSEMBLY REVISION: ALL

PURPOSE: To eliminate possible shorting of components to chasis ground.

DISCUSSION:

The Tandy 1000EX/HX mounting bracket for the Tandy 25-1018 modem may come in contact with component leads on the solder side of the PC board (See Figure 1). Play between the metal mounting bracket screw holes and the modem's logic board may cause the bracket to come in contact with D3, RY1, FB1, and FB4 component leads. Also, D3 and RY1 leads are at +12 volts potential. If the mounting bracket accidently comes in contact with these leads, it's possible for the Tandy 1000EX/HX power supply to become grounded causing no or intermittent operation.

On later modems, a plastic insulator with an adhesive strip has been added to the mounting bracket to correct this problem. The plastic insulator will isolate the mounting bracket from the modem's PC board (solder side). Earlier modems did not have the plastic insulator attached to the mounting bracket and may display the described symptom. If this is the case, a plastic insulator must be attached to the modem's mounting bracket or the following procedure must be performed.

NOTE: The plastic insulator can be obtained at National Parts and is easily attached to the modem's mounting bracket by an adhesive self sticking strip (See figure 2).

PROCEDURE:

Before attaching the EX/HX mounting bracket, make certain D3, RY1, FB1, and FB4 component leads are dressed away from the mounting bracket. Their leads need to be bent inward toward the center of the board and resoldered (See figure 3). The metal mounting bracket then needs to be attached to the circuit board. Verify there is no continuity between the bracket and the component leads with the use of an ohm meter. Install the modem into the computer and test for proper operation.

The plastic insulator is available as:

Description:	Part#	Catalog#
Plastic Insulator	HC-2144	25-1018

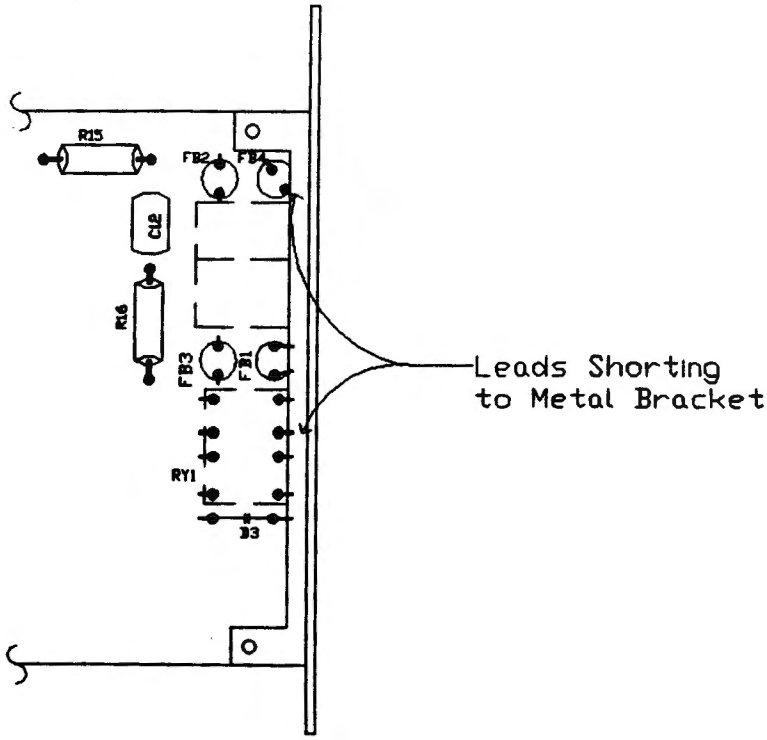

Figure 1
(PCB Top View, "leads touching mounting bracket")

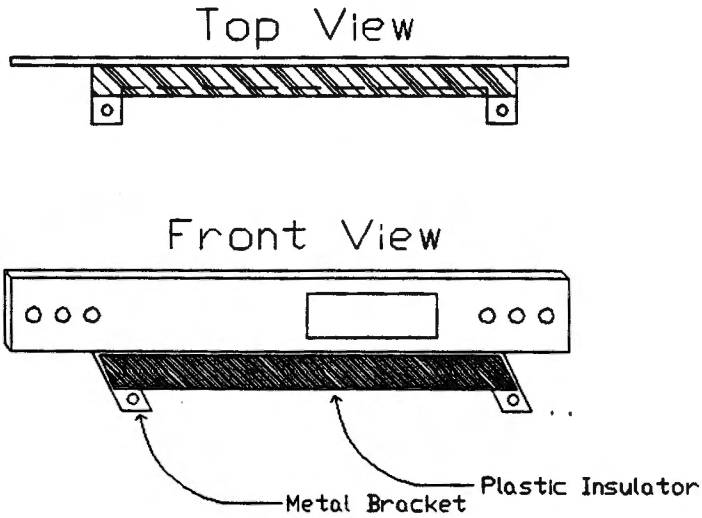

Figure 2
(Mounting Bracket with Insulator)

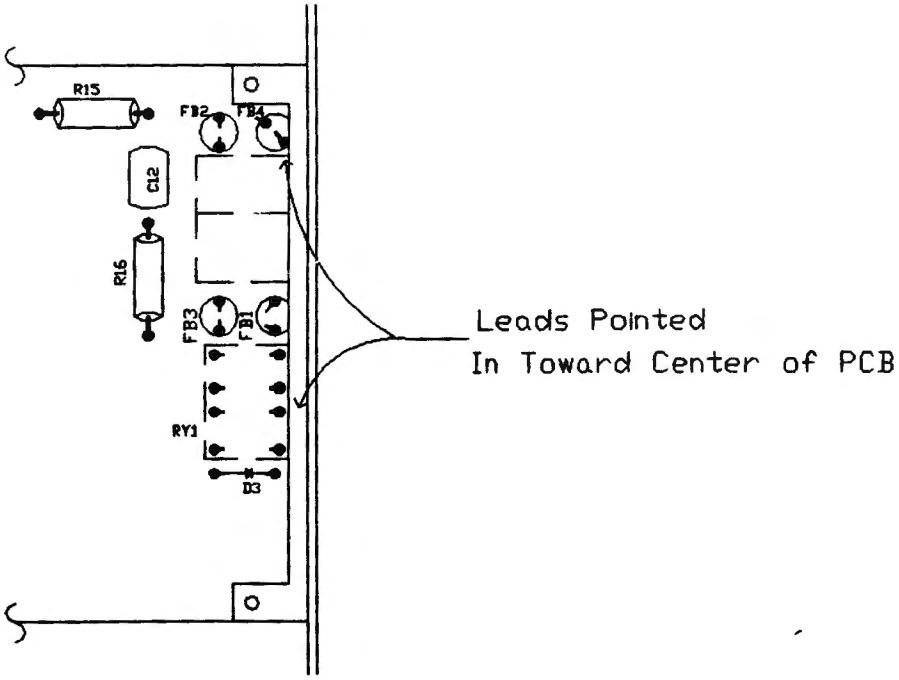

Figure 3
(PCB Top View, "leads dressed away from mounting bracket")

 COPYRIGHT © 199Ø

DATE: May 8, 199Ø

REVISION DATE: May 8, 199Ø

BULLETIN NO: I/O:14Ø

PRODUCT: 26-2839 DMP-24Ø

SUBASSEMBLY: MD-Ø198 Color Ribbon Motor

SUBASSEMBLY REVISION:

PURPOSE: Loose adapter board pins may cause the color ribbon motor to fail.

DISCUSSION:

The DMP-24Ø color ribbon motor uses an adapter board to connect the motor to the printer. The adapter board has a five pin connector mounted to it. The pins of this connector can develop intermittent connections with the adapter board causing the printer not to be able to change colors. Replacing the motor and adapter board will correct the operation of the printer. Later revision motors and adapter boards are modified to prevent this from happening.

Note: The adapter boards are not available separately from the motor.

PROCEDURE:

Unplug and remove the color ribbon motor from printer. Install the new motor. Carefully install the adaptor board connector making sure that the pins go straight into the printer connector. Install the color ribbon and verify proper operation.

PARTS:

Description	Part Number	Catalog Number
Color Ribbon Motor	MD-Ø198	26-2839

 COPYRIGHT © 199Ø

TANDY COMPUTER PRODUCTS

DATE: May 21, 199Ø

REVISION DATE: May 21, 199Ø

BULLETIN NO: I/O:141

PRODUCT: 26-Ø25Ø BPS 25Ø Backup Power Supply

SUBASSEMBLY: Main Power Transformers
TD-ØØØ7
TB-Ø343

SUBASSEMBLY REVISION: All revisions

PURPOSE: Identify two different style transformers use in BPS 25Ø.

DISCUSSION: Two different style main power transformers are used in the BPS 25Ø depending on the type of case mount. Should replacement of this main power transformer become necessary, measure the size of the mounting holes on the bottom of the case from center hole to center hole and order the appropriate power transformer corresponding to the correct dimensions given below.

Part #	Catalog #	Description	
TD-ØØØ7	26-Ø25Ø	Original Style Power Supply	2 3/4" x 2 5/8" base plate
TB-Ø343	26-Ø25Ø	Late Style Power Supply	3 1/2" x 3 1/2" base plate

DATE: June 12, 1990

REVISION DATE: June 12, 1990

BULLETIN NO: I/O:142

PRODUCT: 25-4169 150 MEG SCSI Tape Drive

SUBASSEMBLY: AXX-5133

SUBASSEMBLY REVISION: All current revisions

PURPOSE: To outline belt and eject button replacement procedures.

DISCUSSION: This bulletin is in two parts. The first part discusses the tape drive motor belt and the second part discusses replacement procedures for a broken tape cartridge eject button.

DISCUSSION:

Data integrity from the 150 MEG SCSI Tape Drive requires that the tape speed be at a constant rate. If the tape drive motor belt is worn it can cause inconsistent speed of tape travel resulting in occasional read/write errors.

PROCEDURE:

Inspect the belt by first checking for visual signs of wear. A good belt will have a shiny, darker, rough surface, while a bad belt will have a dull, grey, smooth surface. The belt may look good but still may slip. Check the belt while it is on the motor's spindle by holding down the motor spindle and trying to move the belt with your hand. A bad belt will move easily, while a good belt will move but with a great deal more effort.

Replace the belt if it exhibits either of these indications, and/or the tape drive is giving random Read/Write errors.

TAPE CARTRIDGE EJECT BUTTON:

The following text outlines Tape Cartridge Eject Button replacement procedures.

1. Remove the four screws holding down the Formatter Logic Board. The Formatter Logic Board is the first board you come to on the bottom of the tape drive, and has a female header socket that mates with male staking pins on the Main Logic Board. Carefully remove this board by lifting up on both ends, working it back and forth until it comes apart from the Main Logic Board.

2. Disconnect the front panel LED cable from the Formatter Logic Board and set the Formatter Logic Board aside in a static safe environment. Be sure to note polarity of the connector. The white wire is connected to the pin labeled 1 with a circle around it.

3. Remove the door latch lever screw. There is a retaining nut that is inside the door latch lever. Be careful not to lose it when sliding the door latch lever off.

4. The front bezel has four catches on it; two on the top and two on the bottom. Gently lift up on these four catches so that the front bezel can slide off away from the front of the mechanism frame.

5. Below the eject button, there is a round T-nut with a long clip attached to it. Remove this T-nut and T-nut clip by unscrewing the T-nut screw. Refer to figure 1 for the location of this screw.

6. With this T-nut and T-nut clip removed, the eject bracket can be swung around so that the broken eject button can be tapped away from the bracket using proper bracing and careful force.

7. Clean the metal surface on the drive mechanism where the plastic eject button will slide. Lubricate this same metal surface with the special lubricant listed below. It is an aerosol can and a very small amount is needed (i.e., one quick spray).

8. The new button will have to be glued to the metal bracket using a metal bonding cyanoacrylate based glue. Be sure to sand or file this bracket slightly to remove any previous glue residue. Refer to figure 3 for location of this glue. Only a drop or two is necessary.

```
**************************************************
*                  WARNING !                     *
*                                                *
* This is very powerful glue.  It can bond your *
* skin to metal or other components if you are  *
* not careful.  Use caution when working with   *
* this type of glue.                             *
*                                                *
**************************************************
```

9. Lubricate the area where the T-nut will make contact with the plastic eject button, swing the eject bracket back around into position and then reinstall the T-nut and T-nut clip.

1Ø. Reinstall the rest of the tape drive parts in reverse order and test for proper operation.

Parts needed that can be obtained either locally or from National Parts are as follows;

Description	Part #	Catalog #
Drive Belt	B-1027	25-4169
Eject button	K-2276	25-4169
Cyanoacrylate glue	Obtain locally	

The spray lubricant needed can be obtained from Tandy Consumer Parts as follows;

Description	Tandy Consumer Parts #
Dry lubricant	TE-1671-16S

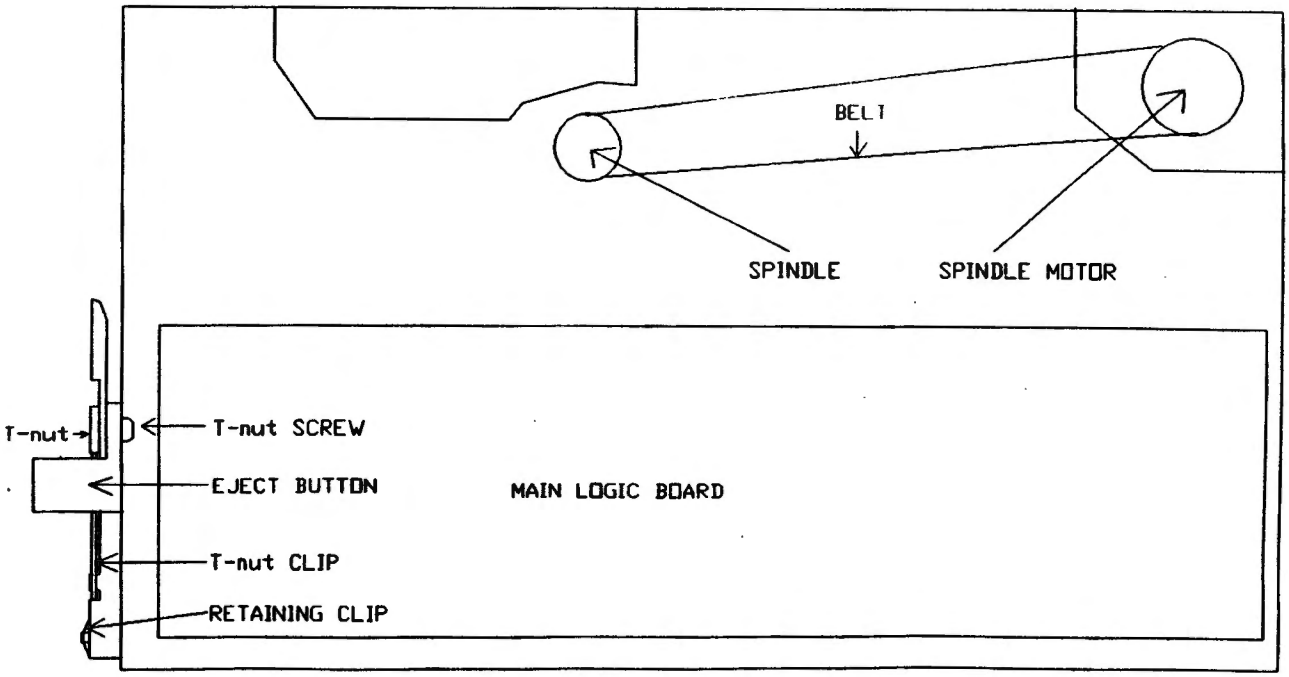

SCSI TAPE DRIVE - BOTTOM VIEW

Figure 1

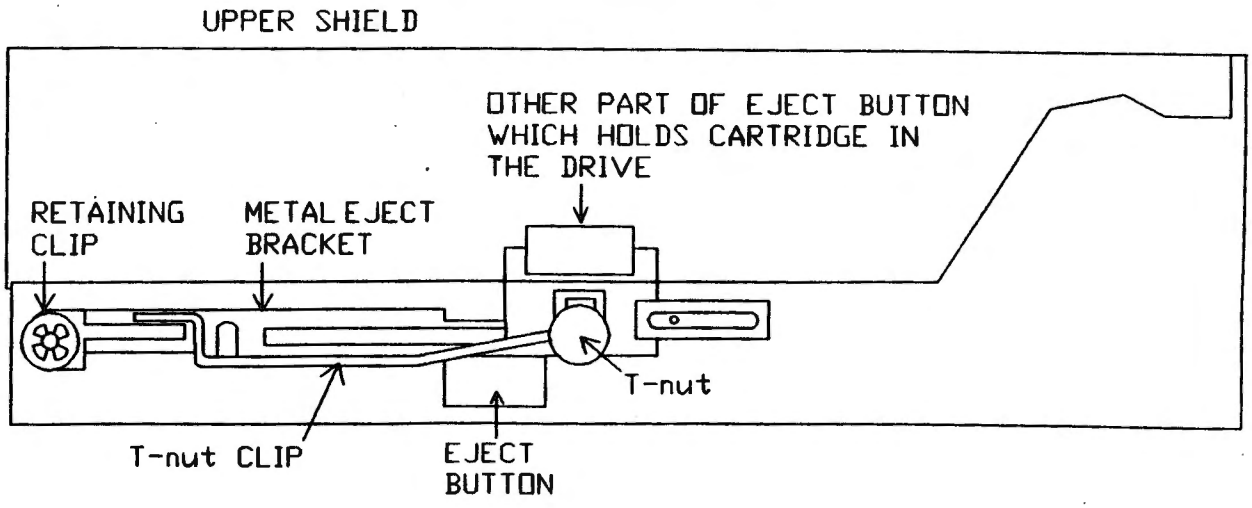

FRONT VIEW OF TAPE DRIVE WITH FRONT BEZEL REMOVED

Figure 2

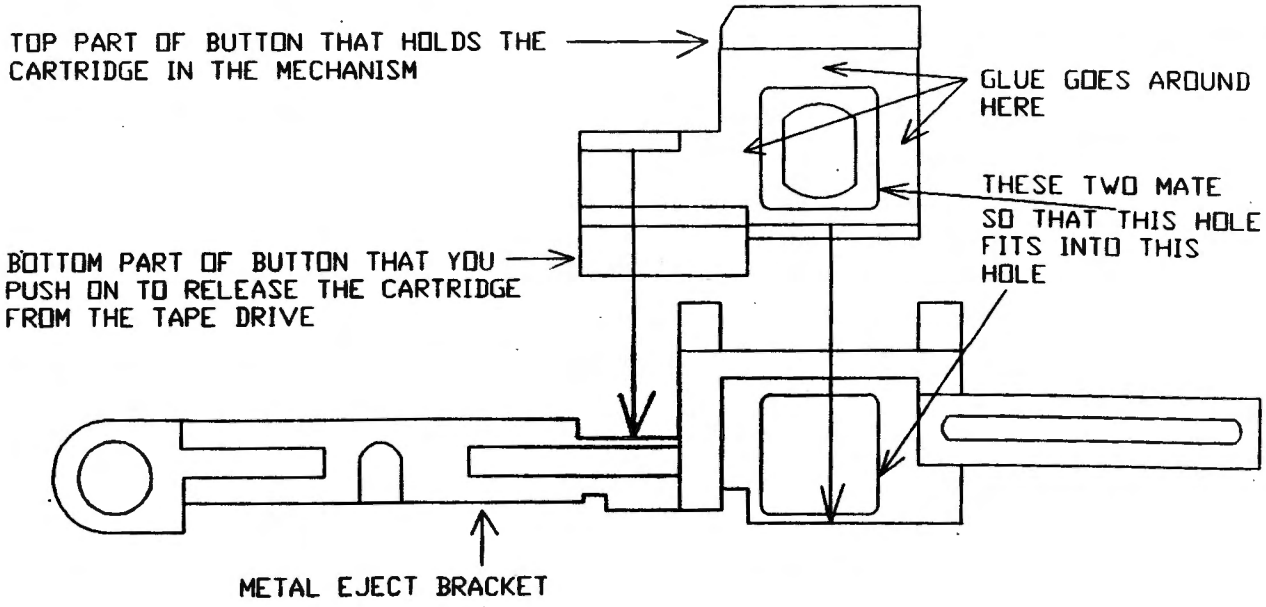

Figure 3

 COPYRIGHT © 1991

DATE: August 3Ø, 199Ø

REVISION DATE: July 1Ø, 1991

BULLETIN NO: I/O:143

PRODUCT: 25-1Ø37, 25-1Ø37A, 24ØØ Baud Modems

SUBASSEMBLY: AX-Ø234, AX-Ø39Ø

SUBASSEMBLY REVISION: All

PURPOSE: To correct possible shorts on the -12 Volt line.

DISCUSSION:

There is a possibility of failure of capacitors C37 and C23. These capacitors have been known to develop resistive shorts, which loads the -12 Volt line of the computer's power supply down to a lower voltage.

PROCEDURE:

If you suspect that a modem board is causing the -12 Volt line to be loaded down in a customer unit, remove the modem board from the computer and check the supply voltages again. If the supply returns to normal after the modem board is removed, replace capacitors C37 and C23 with .1uF 5ØV epoxy dipped monolithic capacitors. Check the board in the computer again. If the problem persists, check C1Ø, IC11 and IC12 which are also on the -12 Volt line.

Description	Part Number	Catalog
.1uF 5ØV epoxy monolithic capacitor (pkg. of 5)	CC-1Ø4JJBCB	1Ø-9999C

 COPYRIGHT © 1991

DATE: January 17, 1991

REVISION DATE: January 17, 1991

BULLETIN NO: I/O:144

PRODUCT: 26-28Ø4 LP1ØØØ Laser Printer

SUBASSEMBLY: Development Unit Drive Gear Cluster

SUBASSEMBLY REVISION: N/A

PURPOSE: Gear alignment procedure to correct uneven print density across the paper.

DISCUSSION: The LP1ØØØ Development Unit and OPC (drum/cleaning kit) Unit must be parallel to each other and close together in order to achieve even print density across the paper.

The main motor of the laser printer drives a gear cluster, part of which rotates the development unit roller. If this gear cluster is not aligned properly with the development unit, it could cause the development unit to not line up correctly with the OPC unit. This could cause printing to be darker or lighter from one side of the paper to the other, depending on the amount of misalignment.

PROCEDURE: The development unit drive gear adjustment outlined below is also shown on page 174 of the service manual for further reference. It requires a special set of tools that are available from Technical Support. Initially, service centers were drop shipped a set of these tools.

The following procedure outlines the gear adjustment.

1. Remove the AC power cord from the laser printer.

2. Open the top and remove the OPC unit and the development unit. Make sure to **cover the OPC drum** to avoid prolonged exposure to room lighting.

3. Remove the tray that the OPC unit and development unit sit in.

4. Towards the rear of the tray area in front of the main drive motor sits the gear cluster. Refer to figure 1 and remove the gears (1) and (2). These are held in by C clips.

5. Remove the plastic stopper (3), also shown in figure 1.

6. Refer to figure 3 and place setting block A as shown. Figure 2 shows what setting blocks A and B look like.

---

7. Now attempt to slide setting block B on the development unit drive gear shaft as shown in figure 3. The development unit drive gear shaft is centered in gear (2) of figure 1. The round part of the two setting blocks should fit together snugly. If they do not, loosen the two screws (4) shown in figure 1 and adjust the bracket (5) for a snug fit between the two setting blocks.

8. Remove setting block B and recheck the fit several times. Adjust as necessary.

9. Reassemble and test for proper operation. To test the print density, place the laser printer into HP LaserJet mode and run the following basic program. This program will print a dense grey scale for a good visual representation of the print density.

```
10 WIDTH LPRINT 255
20 LPRINT CHR$(27);"*p30X";:'
30 LPRINT CHR$(27);"*p30Y";:'30 dots from top edge
40 LPRINT CHR$(27);"*c3000A";:'print 3000 horizontal dots
50 LPRINT CHR$(27);"*c3500B";:'print 3500 vertical dots
60 LPRINT CHR$(27);"*c40G";:'pattern defined as 40% grey
70 LPRINT CHR$(27);"*c2P";:'print grey pattern
80 LPRINT CHR$(12);:'form feed
90 LPRINT
```

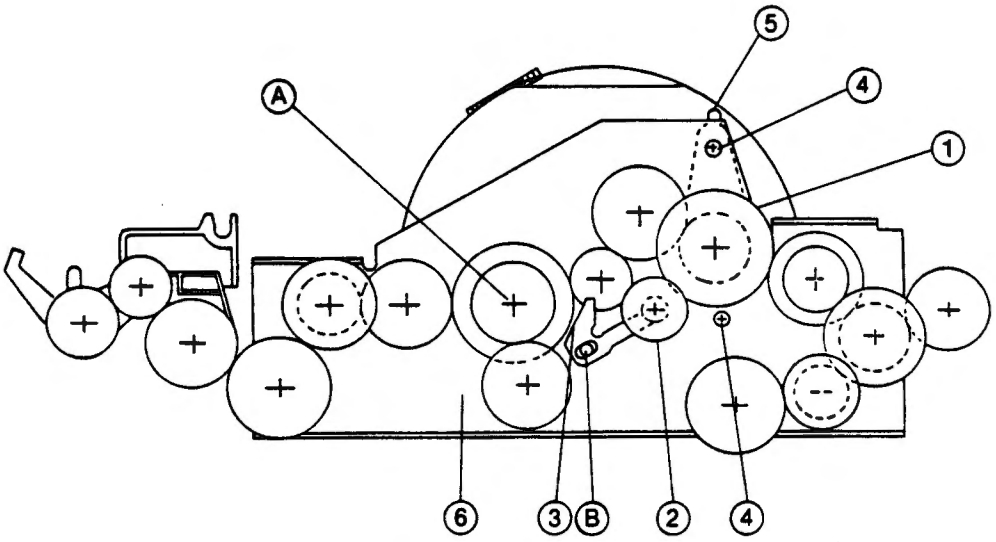

(1) Idler gear (2) Development unit drive gear
(3) Stopper (4) Screw: Bracket
(5) Bracket: Development unit drive gear
(6) Drive plate (A)(B) Shafts

Figure 1

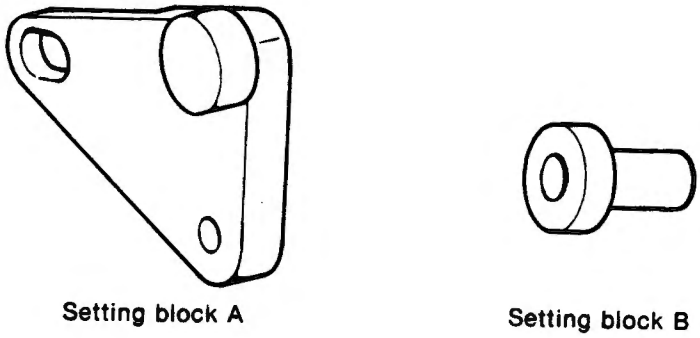

Figure 2

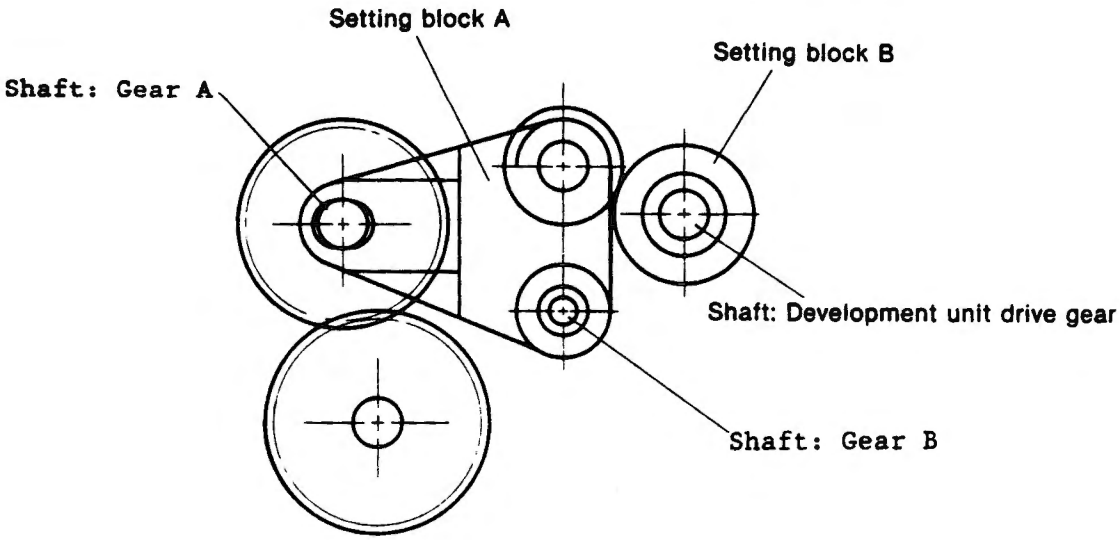

Figure 3

COPYRIGHT © 1991

TANDY COMPUTER PRODUCTS

DATE: February 18, 1991

REVISION DATE: February 18, 1991

BULLETIN NO: I/O:145

PRODUCT: 26-2838 LP95Ø Laser Printer

SUBASSEMBLY: Paper feed sense mechanism.

SUBASSEMBLY REVISION: N/A

PURPOSE: To correct paper jam errors due to a sticking sensor arm.

DISCUSSION: The LP95Ø uses a gravity fed plastic shaft arm to trip a sensor signaling the presence or absence of paper in the main processing case. Normally this plastic shaft has a tab that sticks up into the paper path. As paper moves through the paper path, it pushes this tab which rotates the shaft arm causing a flag on the other end of the shaft arm to break the beam of a sensor, indicating the presence of paper. Once the paper leaves the main processing case, the tab is free to return to its original position, due to the effect of gravity. The sensor beam is no longer broken, thus signaling the absence of paper.

If this shaft binds or sticks, the shaft arm may not return to its original position after the paper has left the processing case, causing a paper jam error indication. To correct this problem, partial disassembly is required. There are two possible points of adjustment to correct this problem.

PROCEDURE:

1. Turn off the LP95Ø and unplug the AC power cord.

2. Open the top compartment, remove the development unit cartridge and photodrum cartridge and set them aside is a safe location. BE SURE to cover the photodrum cartridge so as not to expose it to room lighting.

3. Refer to figure 1. Remove the two side panels (1) and (2) and the front panel (4) as shown. To remove the front cover, it may be necessary to unplug cable CN1 from the PCU PCB. This cable runs to the operation panel. Also, if the Laser Printer has the second tray assembly, remove this by unplugging the cable to the back of the printer and lifting the laser printer up and away from the second tray assembly. It is not necessary to remove the top panel even though the figure shows this.

4. Refer to figure 2. Remove the four screws holding the lock unit (1) in place. Then release two metal spring clips, one on each end of the lock unit, that snap into the frame.

5. Refer to figure 3. Unplug the cable (CN1) connected to the Solenoid PCB (2). Remove the four screws and then remove the paper feed unit (1). NOTE: This figure shows the lock unit (item (3) in this figure) still in place. It should have been removed as outlined in step 4.

6. Refer to figure 4. Turn the paper feed unit upside down and orient it so that the Solenoid PCB (not shown in this figure) attached to the paper feed unit is away from you. Figure 4 shows the location of the plastic arm shaft and its supporting metal frame brackets, one of two paper feed rollers, and one of three paper feed pickup rollers. NOTE: Not all of the paper feed unit is shown in figure 4. This is only a partial diagram.

7. To hold the plastic shaft arm in place, there is a small plastic tab on the end of the plastic shaft arm that sticks through the metal support bracket (the metal support bracket is shown in figure 4 as crosshatched). This small plastic tab may rub against the bent metal support bracket. Visually inspect the tab to see if it is rubbing against the bracket. If it appears to rub, **VERY GENTLY** bend the metal support bracket towards the upright metal frame piece (also shown as crosshatched) that the other end of the plastic shaft arm inserts into **(keeping it perpendicular to bottom metal frame - in figure 4 the bottom metal frame is shown dotted).**

8. If the tab does not appear to rub, insert a straight blade screwdriver into the metal frame shaft groove (also shown in figure 4) and pry up **GENTLY**. This should allow the plastic arm shaft a little more room to rotate within the groove. It may be necessary to repeat this prying procedure several times until proper freedom of movement is achieved.

9. After making either adjustment, check the plastic shaft arm rotation by turning the paper feed unit right side up and pushing on the plastic tab. It should return to its original position when you stop pushing on it. If it does not, check and adjust as necessary until it does.

10. Once freedom of movement has been corrected, reassemble in reverse order and test for proper operation.

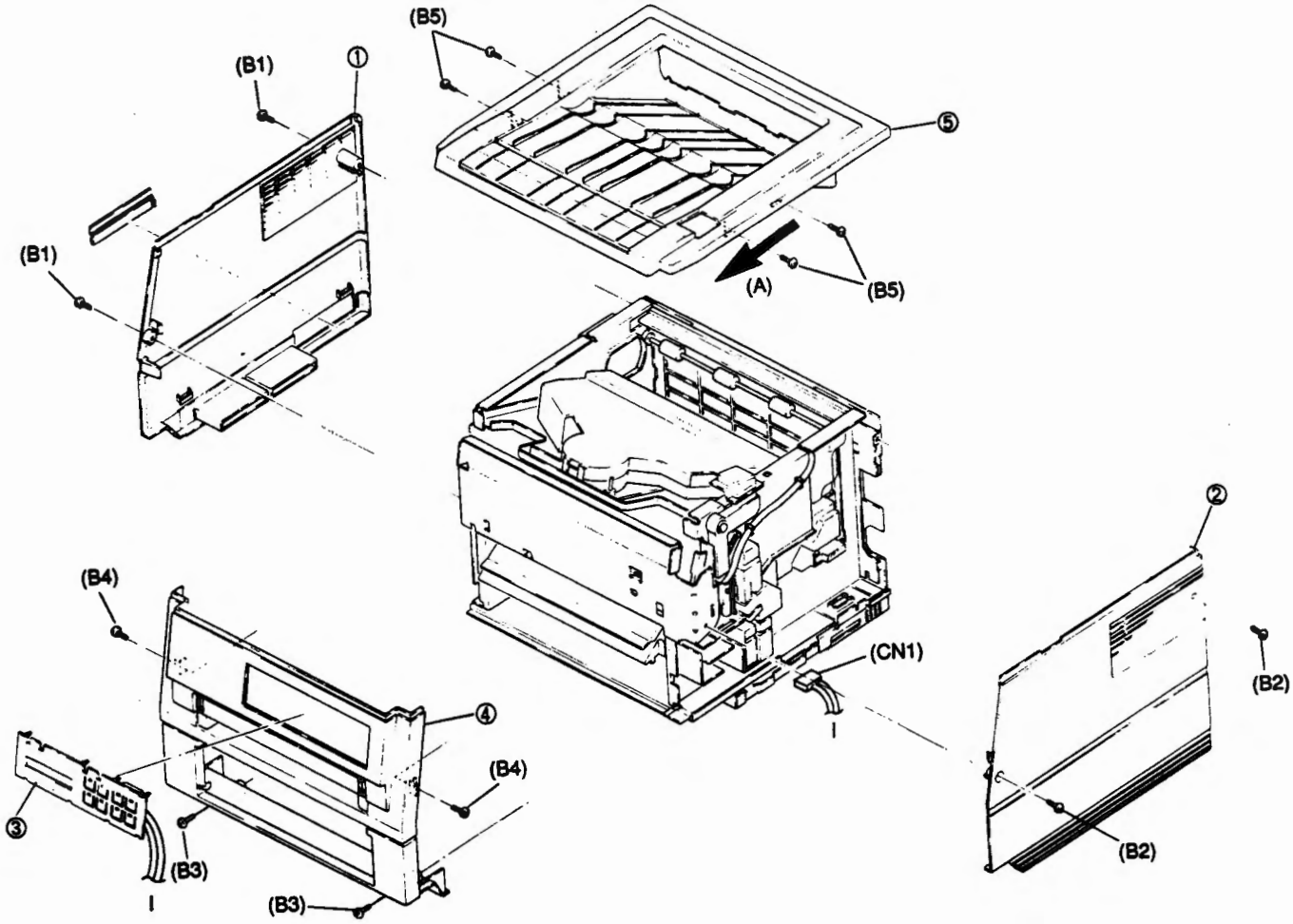

Figure 1

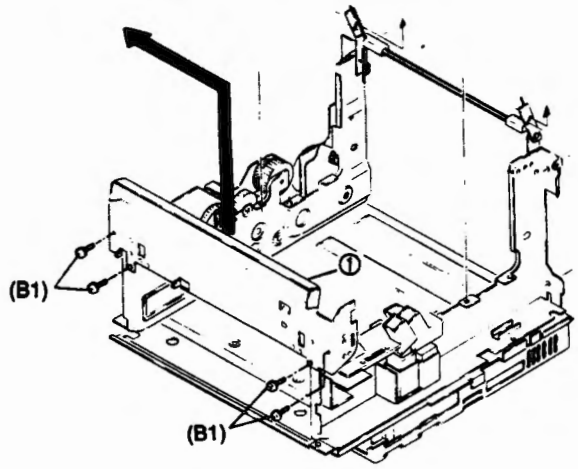

Figure 2

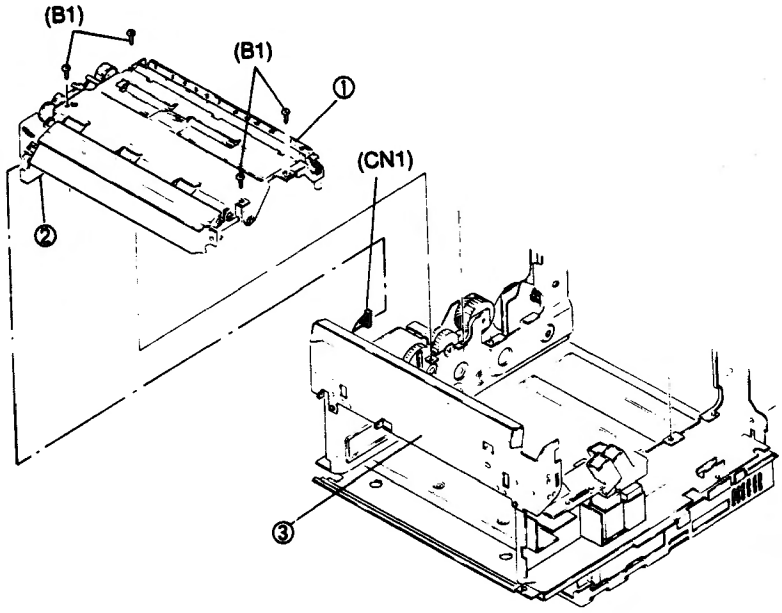

Figure 3

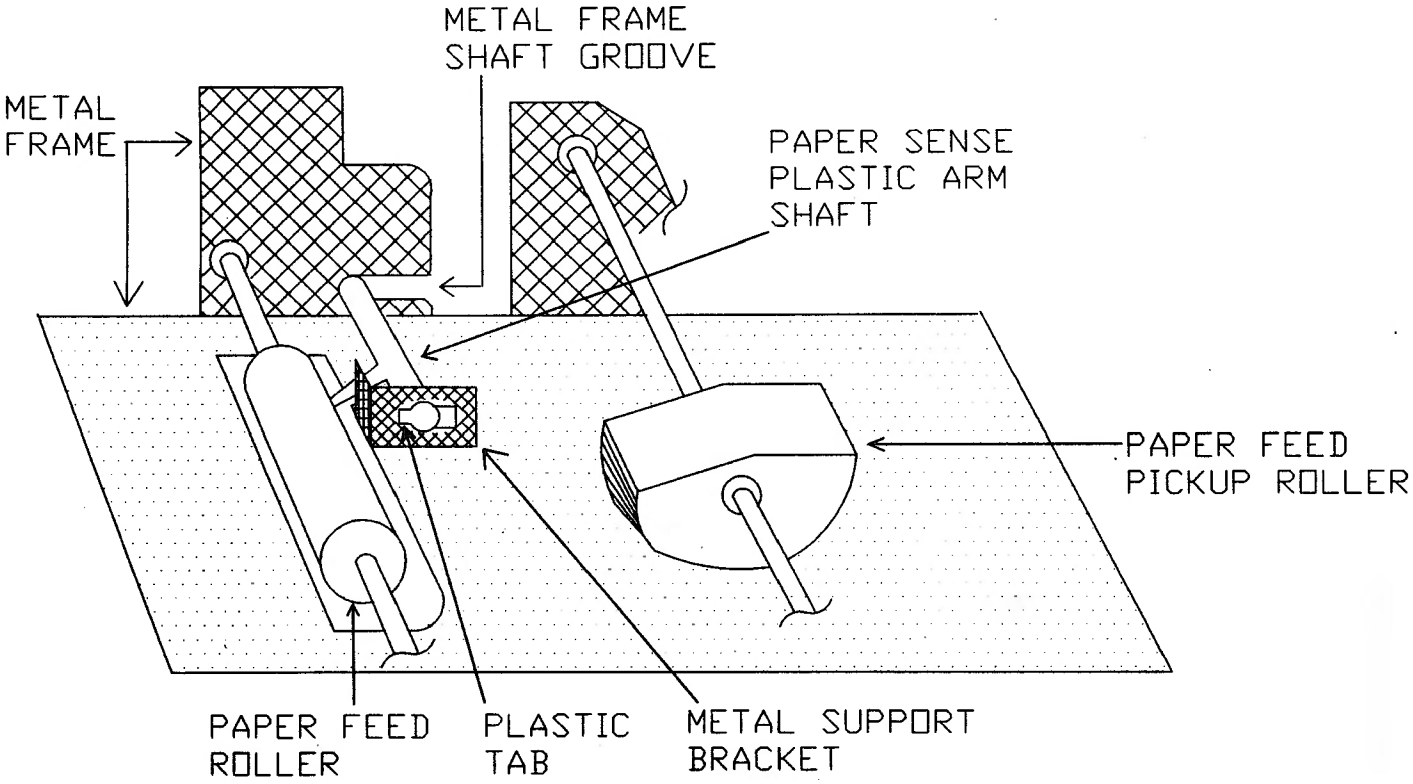

Figure 4

COPYRIGHT © 1991

TANDY COMPUTER PRODUCTS

DATE: February 22, 1991

REVISION DATE: February 22, 1991

BULLETIN NO: I/O:146

PRODUCT: 26-2844 Printer Selector 3

SUBASSEMBLY: All

SUBASSEMBLY REVISION: All

PURPOSE: How to selftest the Printer Selector 3.

DISCUSSION:

Use the following revised procedure when performing a selftest on the Printer Selector 3.

You must have 2 printer cables available to perform the selftest. These cables can be Tandy emulation or IBM emulation or a combination of the two. These cables must be parallel cables with a DB-25 connector on one end and a 36 pin Centronics connector on the other. Examples of cables that may be used are the 26-Ø288 and 26-1258 for IBM emulation or 26-227 and 26-223 for Tandy emulation. The IBM cables are usually marked with a yellow sticker displaying the catalog number of the cable.

PROCEDURE:

Turn OFF the power to the Printer Selector 3.

Connect OUTPUT CHANNEL 1 to INPUT CHANNEL 1 using one of the printer cables.

Connect OUTPUT CHANNEL 2 to INPUT CHANNEL 2 using the remaining printer cable.

Set the internal jumpers on the main logic board as follows:

> On the main logic board there are two sets of jumpers that determine what type of cables are being used. You MUST match these jumpers to the type of cables being used. The jumpers are marked INPUT 1 and INPUT 2. INPUT 1 needs to match the type of cable connecting output channel 1 to input channel 1. INPUT 2 needs to match the type of cable connecting output channel 2 to input channel 2. There are two settings for these jumpers, TAN for Tandy emulation and EML for IBM emulation. Failure to set the jumpers correctly will cause the selftest to fail.

Set the panel switches as follow:

INPUT set to "1"
OUTPUT set to "1"
DOCUMENT SEPARATOR set to "FORM FEED"
CODE set to "EML"

Set the BACKUP PRINTER switch that is located on the side of the printer selector to "1".

The command switch may be in either the ON or OFF position.

Turn ON the power.

Wait for the INPUT 1 and OUTPUT 1 LEDs to light.

Toggle the COMMAND switch 3 times within 2 seconds after the LEDs are lit. This executes the selftest and displays the results on the front panel LEDs. The following table explains the result codes:

RESULT CODES:

LED ON	RESULT
INPUT 1	SELFTEST PASSED
INPUT 2	SWITCH SETTING ERROR
OUTPUT 1	CHANNEL 1 ERROR
OUTPUT 2	CHANNEL 2 ERROR

When finished return the jumpers and switches back to their original positions and test for proper operation.

COPYRIGHT © 1991

DATE: March 18, 1991

REVISION DATE: April 5, 1991

BULLETIN NO: I/O:147

PRODUCT: 26-2838 LP95Ø Laser Printer

SUBASSEMBLY: XB-35ØØ PCU PCB
MX-2612 NVRAM

SUBASSEMBLY REVISION: N/A

PURPOSE: Correct procedure to reprogram the NVRAM containing life count values.

DISCUSSION: The LP95Ø Laser Printer stores important setup information in a NVRAM (Non Volatile RAM) on the PCU PCB. Contained in this setup information are the values of life counts for printer life, development unit life, and photodrum unit life. The life counts should normally start out at their maximum value and count down to zero. Maximum life count values are:

Printer life	2ØØ,ØØØ
Photodrum cartridge life	5Ø,ØØØ
Development cartridge life	25,ØØØ

When the life counts for the photodrum and development unit cartridges reach zero or go below zero to a negative value, the LP95Ø requests that a new cartridge be installed. The new cartridge has a fuse in it which the printer senses, blows, and then resets the life counter.

If the NVRAM life count information were changed to an incorrect value due to a failure, it could cause the printer to request an unnecessary cartridge change. To correct this situation, the life count values must be reprogrammed to their original value.

When a PCU PCB needs to be replaced, the life counts of the new PCU PCB will need to be reprogrammed to match the value (as close as possible if known) of the existing counts held in the PCU PCB being replaced. The life counts can be printed out periodically by executing Self Test #1.

To execute Self Test #1, power up the unit and wait for the READY message on the display. Press the ON LINE key so that the ON LINE LED goes out. Next, hold the PRINT FONTS/TEST key down continuously until the display reads SELF TEST #1. Release the PRINT FONTS/TEST key and wait for the print out. There may be some delay between the release of the PRINT FONTS/TEST key and the actual self test printing process.

A special diagnostic function allows checking and reprogramming the setup information in the NVRAM. There are two options of this diagnostic function that allow reprogramming of the life counts.

First is the NVRAM INITIAL option which will initialize the NVRAM. This will be done when replacing the PCU PCB, or replacing the NVRAM itself. It will also set all life counts to their maximum value. Second, in order to match up the previous life counts to the new NVRAM life counts, the original life counts will have to be programmed using the COUNTER SET menu. Examples of both programming procedures are given below.

PROCEDURE:

1. With the power off, hold down the MENU and ENTER/RESET MENU keys and then power up the printer. The display will read PCU DIAG MODE followed by a letter which is a code for the ROM version of the PCU PCB.

2. Press the MENU key five (5) times. The display will now read NVRAM INITIAL.

3. To allow the function to execute, the manual feed paper switch must be engaged. Do this by inserting a piece of paper into the manual paper feed slot at this time.

4. Press the FORM FEED key to execute the function. The DATA LED will blink. Now press the CONTINUE/RESET key. The DATA LED will stop blinking.

5. Remove the paper inserted into the manual paper feed slot.

6. Press the MENU key two (2) more times. The display will now read DIAG EXIT. Press the FORM FEED key. The display will first read WARMING UP, followed by the status of the printer. If everything is working properly, it will display a READY message followed by the type of printer emulation mode it is currently set to.

Steps 1 through 6 will initialize the NVRAM and set all life counts to their maximum value. To reprogram the individual counter values, follow the procedure below. In our example, we will reset the Development unit life count to its maximum of 25ØØØ.

1. With the power off, hold down the MENU and ENTER/RESET MENU keys and then power up the printer. The display will read PCU DIAG MODE followed by a letter which is a code for the ROM version of the PCU PCB.

2. Press the MENU key four (4) times. The display will now read COUNTER SET PRN.

3. Press the MINUS SIGN (-) key once. The display will now read COUNTER SET DV.

4. Insert a piece of paper into the manual feed paper slot to engage the manual feed paper switch.

5. Press the FORM FEED key. The DATA LED will begin flashing and the display will read DV LIFE: followed by a six digit number. The two numbers on the right will be blinking on and off. This indicates that these are the two numbers that can currently be changed.

6. Press the MINUS SIGN (-) key or the PLUS SIGN (+) key so that the flashing numbers will count down or up until they read ØØ.

7. Now press the ENTER/RESET MENU key. The two middle digits will begin flashing. Press the MINUS SIGN (-) key or PLUS SIGN (+) key so that the flashing numbers will count down or up until they read 5Ø.

8. Press the ENTER/RESET MENU key again. The two numbers on the left will begin flashing. Press the MINUS SIGN (-) key or PLUS SIGN (+) key so that the flashing numbers will count down or up until they read Ø2.

9. Press the CONTINUE/RESET key. The display will read COUNTER SET DV.

1Ø. Remove the paper inserted into the manual paper feed slot.

11. Press the MENU key three (3) times. The display will read DIAG EXIT. Now press the FORM FEED key. The display will read WARMING UP followed by a flashing READY and the emulation type it is currently set to.

Setting the printer and photodrum life counts can be accomplished using a variation of this same procedure. To set the printer life count, skip step 3 and proceed with steps 4 through 11. Note that the numbers will be different than those used in the example. Also, step 5 will display PRINTER: followed by a six digit number. To set the photodrum life count, do steps 1 through 3. Then press the MINUS SIGN (-) key an additional time. The display now reads COUNTER SET OPC (OPC stands for Organic Photo Conductor and is equivalent to the photodrum). Now follow steps 4 through 11 to set the photodrum life count. Note that in step 5 the display will read OPC LIFE: followed by a six digit number, and the numbers being programmed will be different from those used in the example.

After changing the counter settings, execute Self Test #1 to check that the settings are correct.

To order the NVRAM, use the following information:

Description	Part Number	Catalog Number
NVRAM	MX-2612	26-2838

DATE: July 15, 1991

REVISION DATE: July 15, 1991

BULLETIN NO: I/O:148

PRODUCT: 26-28Ø4 LP1ØØØ Laser Printer

SUBASSEMBLY: AX-Ø184 Engine Drive PCB

SUBASSEMBLY REVISION: A11

PURPOSE: To eliminate gray leading edge on paper when printing and to prevent erroneous toner overflow detection.

DISCUSSION:

Some LP1ØØØ printers will print a slight gray blemish across the very top of the sheet of paper. This blemish is caused by the corona wire being charged while the top edge of the paper is directly above the corona wire. This causes some stray toner to attract to the top of the paper resulting in the gray blemish. To correct this, the corona wire is charged just before the paper is positioned over it. To change the timing, the firmware in the CPU (IC9) on the engine drive PCB is modified.

Some LP1ØØØ printers may also erroneously detect a toner cleaning kit full error. The cleaning kit has a small plastic flag that is pushed up as waste toner is collected in it. Sometimes this flag will "jump" up if the printer is bumped and will trigger the sensor. The printer will then give an error which informs the user to change the cleaning kit even though the kit is not full. To prevent this from occurring, there is a change to the firmware in the CPU (IC9) and a hardware modification on the engine drive PCB. After this modification is completed, only a continuous signal from the sensor will cause a cleaning kit full error.

PROCEDURE:

Remove the top case and PCB shield to gain access to the engine drive PCB. The engine drive PCB is the small satellite board located on top of the controller board. First locate the CPU (IC9) on the engine drive PCB. If the manufacturer part number on the CPU is **NOT** GØØ33615, the CPU must be replaced (see figure 2).

1) Remove the engine drive PCB from the LP1ØØØ. Be very careful not to damage the fiber optic cable when disconnecting it. The CPU may or may not be soldered into the PCB. If soldered, desolder the old CPU using multi-layer PCB soldering techniques described in Technical Bulletin INF:Ø1Ø and replace it with the new CPU.

2) Locate IC23 (Figure 1) on the solder side of the engine drive PCB, this is a surface mounted 74LS38. See figure 3 for locating the correct pins to be lifted and for proper location of the jumper wires.

3) Lift pins 1, 11, and 13 of IC23 from the pads on the PCB. Use caution not to break off the pins when lifting them as they will be needed later.

4) Using Kynar wire, connect pin 1 of IC23 to pin 11 of IC23.

5) Using Kynar wire, connect pin 13 of IC23 to the feedthrough directly in front of pin 13. This feedthrough connects to pin 12 of IC23.

6) Reinstall the engine drive PCB and reassemble the printer. Run sample printouts to verify proper operation of the LP1ØØØ.

Description	Part Number	Catalog Number
UPD7811G-526-36 GØØ33615 CPU	MX-374Ø	26-28Ø4

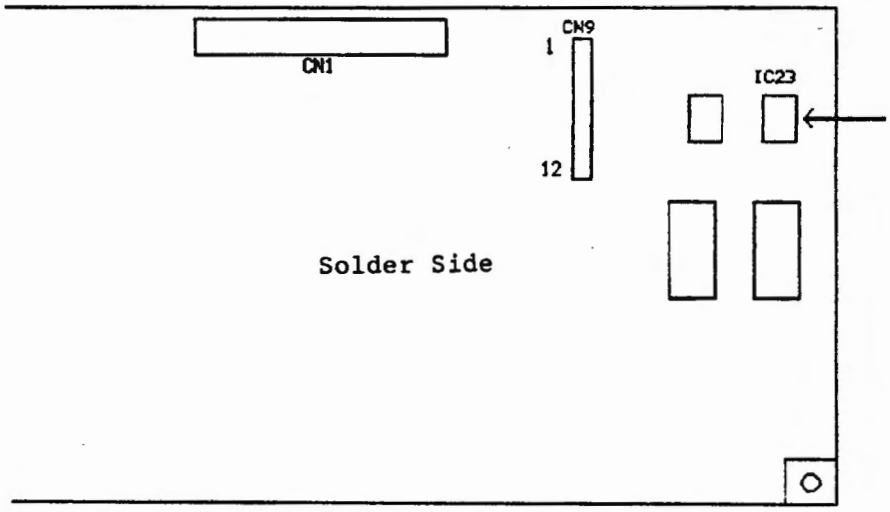

Figure 1

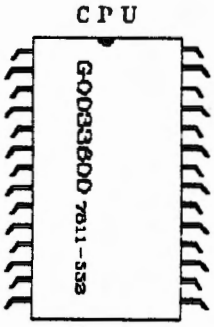

Figure 2

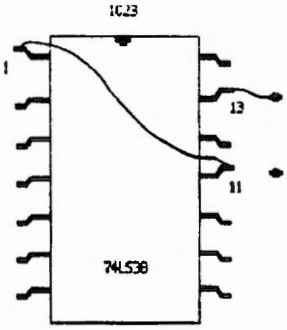

Figure 3

 COPYRIGHT © 1992

TANDY COMPUTER PRODUCTS

DATE: October 1Ø, 1991

REVISION DATE: January 2Ø, 1992

BULLETIN NO: I/O:149

PRODUCT: 26-28Ø4 LP1ØØØ Laser Printer

SUBASSEMBLY: AXX-6Ø22 Charge/Bias Power Supply Unit

SUBASSEMBLY REVISION: All

PURPOSE: Loss of focus and horizontal darkening of areas of print.

DISCUSSION: The LP1ØØØ uses a charge/bias power supply to generate high voltages for both the drum and the development unit. In a properly functioning printer, this high voltage generation will only occur during the initial drum quenching cycle and when a print cycle is initiated. During idle time, the charge/bias power supply is turned off.

If a failure occurs that causes the charge/bias power supply to be on all the time, loss of focus and horizontal darkening of areas of print can result. Horizontal refers to the width of the paper as it travels through the printer. Refer to figure 1 for an example of the focus/horizontal darkening problem.

2. Default Values

Emulation	(1)	HP LaserJet Plus
Print Orientation	(2)	Portrait
Line Termination	(3)	CR=CR, LF=LF, FF=FF
Auto Wrap	(4)	Disable
Font	(7)	LETTER GOTHIC 16.7

3. Fonts in system

COURIER 10	(•)	ABCDEFGHIJKLMNOPQRST
PRESTIGE ELITE 12	(•)	ABCDEFGHIJKLMNOPQRST
LETTER GOTHIC 16.7	(•)	ABCDEFGHIJKLMNOPQRST
CENTURY PS	(*)	ABCDEFGHIJKLMNOPQRST
COURIER 10	(*)	[illegible]
PRESTIGE ELITE 12	(*)	[illegible]
LETTER GOTHIC 16.7	(*)	[illegible]
CENTURY PS	(*)	[illegible]

Figure 1

PROCEDURE: If you have a laser printer that exhibits a focus/horizontal darkening problem, check the on/off state of the charge/bias power supply. This can be done using the following procedure and referring to figure 2 on the following page.

1. Remove the cleaning kit/drum (OPC magazine, item 9) and the development unit (item 11). Since this measurement is done with the printer open, an interlock defeat tool will need to be installed over the interlock switch (item 1Ø).

2. Using a high voltage probe, connect the ground lead of the high voltage probe to the charge voltage terminal (item 4). Connect the high voltage probe tip to the metal chassis of the laser printer. **The high voltage probe connections are reversed because a negative voltage is being measured.**

3. Turn the printer on. The high voltage probe should show zero volts to start, and then show a voltage reading in the range of -6.ØKVDC to -9KVDC after a few seconds, as the printer starts its initial quenching cycle. The -6.ØKVDC is a loaded voltage reading, which is what the service manual shows. With the top open, the charge/bias power supply is unloaded, giving a higher reading in the range of -7KVDC to -9KVDC. Remember, too, that the leads of the meter were reversed in step 2. This means that the positive voltage reading of the meter is actually a negative voltage.

   Once this cycle completes (about 2Ø seconds), the printer will go to an idle state, in which the charge/bias power supply should be off, if the printer is working properly.

CONCLUSION: If the high voltage probe shows a high voltage reading immediately upon power up, or remains on after the initial quenching cycle, then there is a problem. Possible causes for this are a pinched wiring harness from the charge/bias power supply, a bad charge/bias power supply, or a bad engine drive board.

The charge/bias power supply and engine drive board can be checked by substituting each part. To check the wiring harness, cut the tie wraps, move the wires around, and remeasure the charge voltage terminal level. If the problem is corrected, then rewrap the harness and measure again. If it is not corrected, continue with substituting the parts listed above.

Once the problem is corrected, reassemble the printer, let it warm up for at least 3Ø minutes, and test for proper operation.

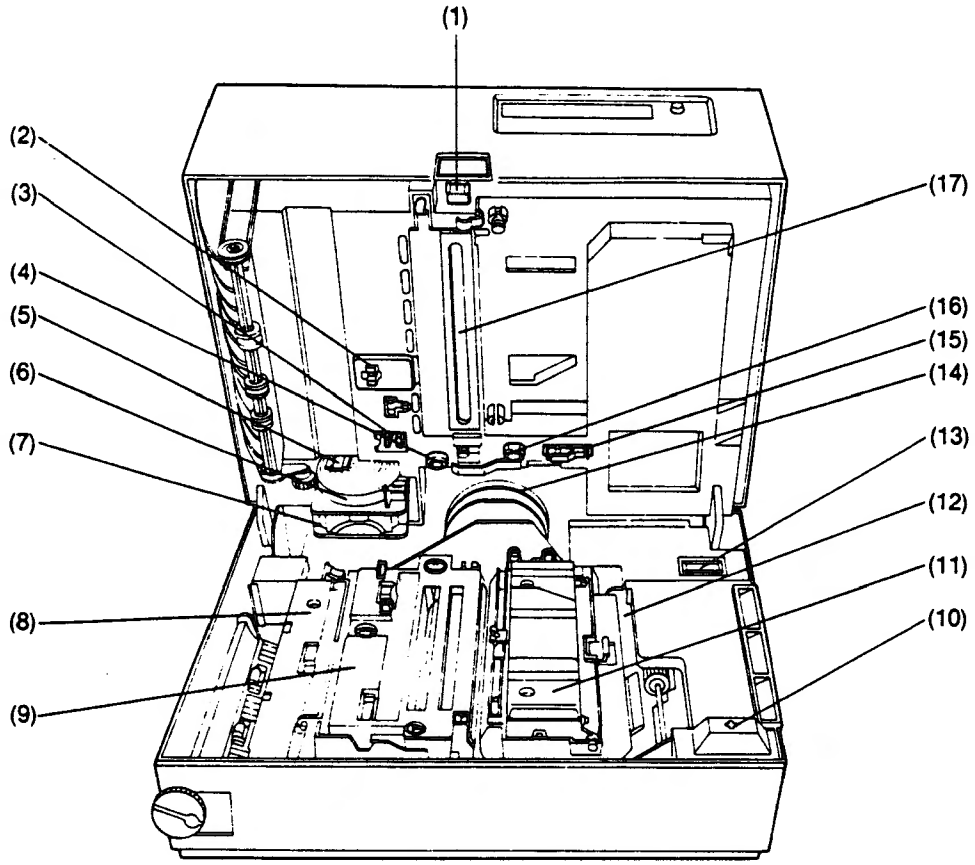

(1) Shield plate
(2) Toner overflow sensor
(3) Type sensor
(4) Charge voltage terminal
(5) Reset lever
(6) Ozone filter
(7) Fan
(8) Fusing cover
(9) OPC magazine (cleaning unit)
(10) Interlock switch
(11) Development unit
(12) Processing unit case
(13) Print counter
(14) Main motor
(15) Toner-end sensor
(16) Development bias voltage terminal
(17) Laser beam shutter

Figure 2

DATE: January 2, 1992

REVISION DATE: January 2, 1992

BULLETIN NO: I/O:15Ø

PRODUCT: 26-28Ø4 LP1ØØØ Laser Printer

SUBASSEMBLY: HG-ØØØ4 Optical Unit

SUBASSEMBLY REVISION: All

PURPOSE: Symptoms and causes of failures related to optical units.

DISCUSSION: In the LP1ØØØ, images printed on the page are formed by pulsing a laser beam on and off as the beam scans across a light sensitive OPC (organic photoconductive) drum. Refer to Figure 1. The laser is being turned on when a dot is desired and off when no dot is desired. The dots created on the drum surface are arranged to form characters or graphics patterns.

In this scanning/character generation, there are two actions occurring; the scanning of the beam in a horizontal direction for each scan line, or row of dot/spaces, and the rotation of the drum vertically to bring each new scan line into the exposure area of the laser. To insure accurate character formation, the timing control of these two functions must be precise.

The scanning of the laser beam is accomplished by a scanning motor rotating a polygonal mirror. The polygonal mirror causes the laser beam to scan across the drum. Each side of the polygonal mirror equals one scan line. The scanning motor is built into the optical unit, along with the laser, laser control circuitry, and other lenses and mirrors.

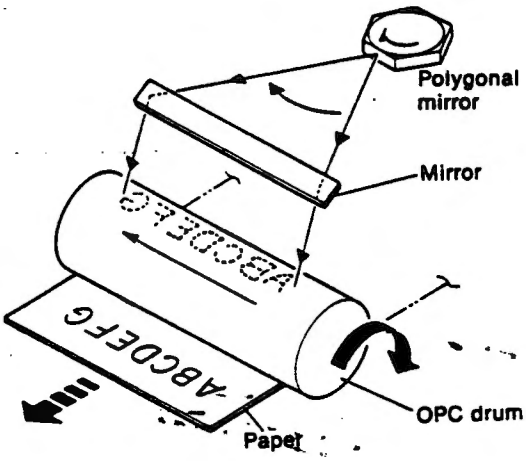

Figure 1

Figure 2 shows a portion of a sample printout of a scanning motor that is spinning too slow. Note the curved "dots" that make up the characters (Figure 3 shows an enlarged portion of the text). Also, note that there are gaps between the dots vertically (down the page), indicating that the scanning of each line of dots making up the character image is not synchronized to the rotation of the drum. Both the main drive motor and the optical unit should be suspect, although this problem has proven to be the optical unit in most cases.

```
*********************
*                   *
*   Summary Sheet   *
*                   *
*********************

1. System configuration

   Revision level                 TANDY Laser V 3.0.3
   Paper size  Resident           LETTER

   Total RAM                      1536 KB
   Available RAM                  1200 KB

2. Default Values

   Emulation                (1)   HP LaserJet Plus
   Print Orientation        (2)   Portrait
   Line Termination         (3)   CR=CR, LF=LF, FF=FF
   Auto Wrap                (4)   Enable
```

Figure 2

```
2. Default Values

   Emulation                (1)   HP LaserJe
   Print Orientation        (2)   Portrait
   Line Termination         (3)   CR=CR, LF=
   Auto Wrap                (4)   Enable
```

Figure 3

Figure 4 shows a portion of an LP1000 self test print that at first glance might appear normal. But upon closer inspection (Figure 5 shows an enlarged portion of the text), we can see that lines that make up the character do not line up vertically down the page. This indicates a variation in the speed of the scanning motor, which could be caused by a bad scanning motor, the controlling circuitry for the scanning motor, or a "noisy" power supply that powers the scanning motor/control circuitry. In this example, the power supply had excessive noise on the +12VDC line.

```
**********************
*                    *
*   Summary Sheet    *
*                    *
**********************
```

1. System configuration

Revision level	TANDY Laser V 2.0.0
Paper size Resident	LETTER
Total RAM	1536 KB
Available RAM	1201 KB

2. Default Values

Emulation	(1)	HP LaserJet Plus
Print Orientation	(2)	Portrait
Line Termination	(3)	CR=CR, LF=LF, FF=FF
Auto Wrap	(4)	Disable
Font	(7)	COURIER 10

Figure 4

2. Default Values

Emulation
Print Orientation
Line Termination
Auto Wrap

Figure 5

COPYRIGHT © 1992

TANDY COMPUTER PRODUCTS

DATE: January 17, 1992

REVISION DATE: February 7, 1992

BULLETIN NO: I/O:151

PRODUCT:
25-4Ø43 8 Bit Tandy VGA Adapter
25-5ØØ1 16 Bit Tandy VGA Adapter
G52-164Ø 8 Bit GRiD VGA Adapter
G53-1636 16 Bit GRiD VGA Adapter

SUBASSEMBLY:
AX-Ø238 Tandy 8 Bit Adapter PCB
AX-Ø44Ø Tandy 16 Bit Adapter PCB
AX-Ø527 GRiD 8 Bit Adapter PCB
AX-Ø532 GRiD 16 Bit Adapter PCB

SUBASSEMBLY REVISION: All

PURPOSE: Lack of video or missing video modes can be corrected on many boards by replacing a defective crystal.

DISCUSSION:

Some Tandy/GRiD 8 bit and 16 bit VGA adapters experience no video output or have some video modes missing. Many of these adapters can be easily repaired by replacing a defective crystal.

The Tandy 25-4Ø43A (AX-Ø569) 8 bit VGA board does not have any crystals present in the X1, X2, and X3 sockets and the procedure below does not apply.

PROCEDURE:

For 25-4Ø43 (AX-Ø238) and G52-164Ø (AX-Ø527) 8 bit adapters:

1) With an oscilloscope, measure the waveform on pin 3 of crystal X1 and verify that the output is 36.ØØØMHz. If the 36.ØØØMHz signal is not present replace crystal X1.

2) With an oscilloscope, measure the waveform on pin 3 of crystal X2 and verify that the output is 25.175MHz. If the 25.175MHz signal is not present replace crystal X2.

3) With an oscilloscope, measure the waveform on pin 3 of crystal X3 and verify that the output is 28.322MHz. If the 28.322MHz signal is not present replace crystal X3.

For 25-5ØØ1 (AX-Ø44Ø) and G53-1636 (AX-Ø532) 16 bit adapters:

1) With an oscilloscope, measure the waveform on pin 8 of crystal X1 and verify that the output is 36.ØØØMHz. If the 36.ØØØMHz signal is not present replace crystal X1.

2) With an oscilloscope, measure the waveform on pin 8 of crystal X2 and verify that the output is 25.175MHz. If the 25.175MHz signal is not present replace crystal X2.

3) With an oscilloscope, measure the waveform on pin 8 of crystal X3 and verify that the output is 28.322MHz. If the 28.322MHz signal is not present replace crystal X3.

4) With an oscilloscope, measure the waveform on pin 8 of crystal X4 and verify that the output is 42.ØØØMHz. If the 42.ØØØMHz signal is not present replace crystal X4.

PARTS:

For 25-4Ø43 (AX-Ø238) and G52-164Ø (AX-Ø527) 8 bit VGA adapters:

Description	Part#	Catalog#
25.175MHz Crystal (X2)	CX-1122	25-4Ø43
28.322MHz Crystal (X3)	CX-1123	25-4Ø43
36.ØØØMHz Crystal (X1)	CX-1124	25-4Ø43

For 25-5ØØ1 (AX-Ø44Ø) and G53-1636 (AX-Ø532) 16 bit VGA adapters:

Description	Part#	Catalog#
25.175MHz Crystal (X2)	CX-Ø536	25-5ØØ1
28.322MHz Crystal (X3)	CX-Ø537	25-5ØØ1
36.ØØØMHz Crystal (X1)	CX-Ø539	25-5ØØ1
42.ØØØMHz Crystal (X4)	CX-Ø541	25-5ØØ1

 COPYRIGHT © 1992

DATE:	March 1Ø, 1992	
REVISION DATE:	March 1Ø, 1992	
BULLETIN NO:	I/O:152	
PRODUCT:	26-28Ø8	DMP-44Ø
SUBASSEMBLY:	All	
SUBASSEMBLY REVISION:	All	

PURPOSE: Common repair procedures to eliminate printhead carriage "slams".

DISCUSSION:

Some DMP-44Ø (26-28Ø8) printers exhibit left and/or right side "slamming" of the printhead carriage assembly. Slamming is when the printer looses track of where the carriage assembly is and when the printer does the next carriage return the carriage assembly hits one of the carriage stops. The following information can be used to help correct this.

PROCEDURE:

1. Make sure that the printhead is not positioned too closely to the platen. A printhead that is too close to the platen can rub the platen and cause the carriage assembly to stick. A printhead that is adjusted too close or too far from the platen can cause damage to the printhead, as well as poor print quality.

   a. Adjust the printhead gap. Refer to the "Replacement and Adjustment" section in the service manual for how to adjust the printhead.

2. Adjusting the printhead guide rails so they are parallel with the platen can keep the printhead from rubbing one side or the other of the platen while printing. If the printhead rubs the platen, the carriage assembly will stick and cause the carriage to slam into one of the carriage stops.

   a. Adjust the printhead guide rails so they are parallel with the platen. Refer to the "Adjustment for Parallel between Platen and Print Head" section of the service manual.

3. Cleaning and lubrication of the DMP-44Ø will help the printhead carriage assembly to move freely. A carriage assembly that is dirty will cause the carriage assembly to stick. This will cause the carriage assembly, on the next carriage return, to slam into one of the carriage stops.

   a. Remove the head carriage assembly from the guide rails and clean inside the carriage assembly where it rides on the rails.

   b. Using a wax (like Lemon Pledge®) and buffing the rails to make them smooth helps the carriage to travel more freely.

   c. Clean the guide rails and lightly lubricate them with a silicon based oil. Be sure to wipe any excess oil off the guide rails.

4. Adjusting the timing belt can help the printhead carriage to move freely. A timing belt that is out of adjustment will cause the printer to loose track of where the carriage is. On the next carriage return the carriage assembly will slam into one of the carriage stops.

   a. The timing belt adjustment is done by changing the position of the idler pulley.

   b. On the right hand side of the printer locate the idler pulley, and the the two screws that secure it, and loosen the screws.

   c. While manually pressing the idler pulley outward to put tension on the timing belt, tighten the screw.

   d. The belt should show enough tension so that with the printhead on the left side of the carriage guides there is less than 1/4" of play at the center of the belt.

      NOTE: If there is too much tension on the timing belt, the printhead carriage assembly will not move.

      NOTE: If the idler pulley is at the end of the adjustment, and the belt is still not tight, the timing belt (B-Ø264) must be replaced.

      NOTE: A bad timing belt may not be visible to the eye, for units that are constantly having head carriage slams, replace the timing belt (B-Ø264).

   e. Conduct the selftest in NLQ character mode for several pages to ensure that the carriage does not slam.

5. Replacing the felt bushings can allow the carriage move easier. A printer with dirty or worn out bushings can cause the carriage assembly to stick.

   a. Replace the two felt bushings (HC-6238). Two HC-6238 bushings are needed per printer. Refer to the service manual for how to replace the bushings.

6. Rotating a worn head carriage guide rail will allow the carriage to ride on a smoother part of the guide rail. A guide rail that is worn will cause the carriage assembly to stick. This will cause the printer to loose track of where the carriage is, which will cause a carriage slam.

   a. Rotate the head carriage guide rails 90 degrees.

7. Replacing a ribbon that is sticking or jamming will allow the print head carriage to move freely.

   a. Manually check the ribbon by turning the tension adjustment knob located on the ribbon cassette. If the ribbon does not move freely, replace the ribbon.

   NOTE: One of the most often replaced parts of the DMP-440 is the ribbon drive shaft assembly (RK-0010). When a ribbon jams, it places excessive pressure on the ribbon drive shaft which can cause the ribbon drive shaft to break.

8. Replacing the head carriage assembly can help the head to ride better on the guide rails.

   a. Replace the head carriage assembly (HC-4914). Refer to the service manual for how to replace the head carriage assembly.

9. Replacing the carriage motor (MD-0015) can increase the amount of pressure that moves the printhead carriage assembly, preventing the carriage assembly from sticking. Try all other procedures before replacing the carriage motor.

   a. Replace the carriage motor. Refer to the service manual for how to replace the carriage motor.

PARTS LIST:

Description	Part#	Catalog#
Timing Belt	B-Ø264	26-28Ø8
Felt Bushings	HC-6238	26-28Ø8
Ribbon Drive Shaft	RK-ØØ1Ø	26-28Ø8
Carriage Motor Assembly	MD-ØØ15	26-28Ø8
Head Carriage Assembly	HC-4914	26-28Ø8

 COPYRIGHT © 1992

DATE:	April 2Ø, 1992	
REVISION DATE:	April 2Ø, 1992	
BULLETIN NO:	I/O:153	
PRODUCT:	26-2838	LP95Ø Laser Printer
	26-2879	LP99Ø Laser Printer
SUBASSEMBLY:	XB-35ØØ	PCU/DC2 PWB unit
SUBASSEMBLY REVISION:	A11	

PURPOSE: Printer cannot access or select optional second paper tray.

DISCUSSION:

An optional second paper tray is available that can be added to the LP95Ø or LP99Ø laser printer. This paper tray is connected to the printer by a short 9 pin cable that plugs into the rear of the printer. The 9 pin connector at the rear of the printer routes power and various control signals between the printer and the paper tray. If stress is accidently applied to the 9 pin connector, the solder connections between the connector and the PCB within the laser printer may break. The laser printer will not recognize the presence of the optional paper tray if any of the connections to the 9 pin connector are broken.

PROCEDURE:

1) Disassemble the printer to gain access to the PCU/DC2 PWB unit. See the disassembly instructions in the service manual for proper disassembly procedures.

2) Remove the PCU/DC2 PWB unit and locate CN3. This is the 9 pin connector that the secondary paper tray cable plugs into.

3) Verify the continuity of all solder connections. If any connections are damaged, resolder them and verify continuity.

4) Reassemble the printer and verify proper functionality of the unit. Verify that the printer can access the secondary paper tray for printing.

COPYRIGHT © 1992

TANDY COMPUTER PRODUCTS

DATE:	April 29, 1992	
REVISION DATE:	April 29, 1992	
BULLETIN NO:	I/O:154	
PRODUCT:	26-2838	LP95Ø Laser Printer
SUBASSEMBLY:	AX-Ø488	ICU PWB
SUBASSEMBLY REVISION:	All	
AUTHOR:	Jim Skilskyj	

PURPOSE: Printer fails to print properly with Windows 3.1 TrueType fonts.

DISCUSSION:

When attempting to print a document to an LP95Ø from Windows version 3.1 and you are using the TrueType fonts, the printer may print garbage and give a data loss error message on the LCD display.

The failure is due to an earlier version of the BIOS ROMs on the ICU PWB. To determine which version BIOS ROMs are installed, press the online button to set the printer offline. Press and hold the print fonts/test button until self test #1 is displayed on the LCD display. The menu setting list will be printed out. Under the 'Other Information' heading, locate the sub heading 'Program ROM'. The code under this sub heading represents the version of the BIOS ROMs. If the code is 'CPR1C,CPR2C', the ROMs must be replaced. If the code is 'CPR1D,CPR2D', 'CPR1E,CPR2E', or later, the BIOS ROMs do not need replacing.

PROCEDURE:

1) Remove the two screws retaining the ICU PWB at the rear of the printer.

2) Remove any RAM or font cards and slide the ICU PWB from the rear of the printer.

3) Locate BIOS ROMs 4C and 4D and replace the BIOS ROMs with the two new BIOS ROMs. ROM CPR1 belongs in socket 4D and ROM CPR2 belongs in socket 4C.

NOTE: The BIOS ROMs are 28 pin ROMs and the sockets have 32 pins. The ROMs must be installed with pin 1 of the ROMs inserted into pin 3 of the sockets.

4) Reassemble and verify proper functionality of the printer.

Description	Part Number	Catalog Number
BIOS ROM 4D (CPR1)	MXP-Ø859	26-2838
BIOS ROM 4C (CPR2)	MXP-Ø86Ø	26-2838

 COPYRIGHT © 1992

DATE: June 10, 1992

REVISION DATE: June 10, 1992

BULLETIN NO: I/O:155

PRODUCT: 25-4166 and 25-4166A 160MB SCSI Tape Drive

SUBASSEMBLY: AXX-5244 Tape Drive

SUBASSEMBLY REVISION: All

AUTHOR: Michael K. Platts

PURPOSE: To identify the differences between the 25-4166 and 25-4166A.

DISCUSSION: The 25-4166 SCSI tape drive will not function when used with a 25-4161 or 25-4161A SCSI host adapter. When attempting to backup data to the tape drive with this configuration, the computer will lock up. A 25-4161B or 25-4161C **must** be used in conjunction with the 25-4166 tape drive for proper operation. The 25-4166A will function with the 25-4161, 25-4161A, 25-4161B, or 25-4161C host adapters. Use the following procedure to identify the difference between the 25-4166 and 25-4166A SCSI tape drives.

PROCEDURE: Locate the SCSI controller IC at position U12 on the bottom of the tape drive. If the part number is LZ84122, the drive is a 25-4166. If the part number is LZ8412A1, the drive is a 25-4166A.

COPYRIGHT © 1992

TANDY COMPUTER PRODUCTS

DATE:	August 3, 1992
REVISION DATE:	August 3, 1992
BULLETIN NO:	I/O:156
PRODUCT:	26-2845 DMP-213Ø
SUBASSEMBLY:	All
SUBASSEMBLY REVISION:	All
AUTHOR:	Martin J Rester

PURPOSE: Correct procedure to perform vertical character alignment.

DISCUSSION:

The DMP-213Ø printer may exhibit vertical character alignment problems. Incorrect vertical character alignment will cause columns of print to look uneven from the top to the bottom of the page. The left margin will also be uneven. A test print should be performed to check the vertical alignment. The vertical alignment should be done when the printhead, carriage, or carriage motor have been replaced. See example of vertical character alignment on page 3.

PROCEDURE:

1. Load the printer with paper for a wide carriage.

2. With the power off, hold down the **NLQ/DP** and **FF/LOAD** keys and then power up the printer. The display will read "INITIAL TEST" for about 3 seconds then "ALIGNMENT TEST". The printer then prints seven different vertical alignment positions. See sample printout #1.

After printing the vertical alignment position test, the paper will advance for the operator to view the different positions. The display will now read "CURRENT POSITION = X", X being the number of one of the seven possible positions. An asterisk (*) will be placed beside the current position. See sample printout #1.

3. To increment the current position by one press the **LF** key once. To decrement the current position by one press the **FF/LOAD** key once.

4. To enter the current position or new position press the **ON/OFF LINE** key. The display will now read "POSITION SET OK". The printer will now pull the paper back into the printer and print the new position. See sample printout #2.

---------- SAMPLE PRINTOUT #1 ----------

```
CURRENT POSITION = 3
 POSITION = 1
HHHH
```

Example of incorrect vertical character alignment.

```
!     !  !     !  !     !  !     !
!     !  !     !  !     !  !     !
!-----!  !-----!  !-----!  !-----!
!     !  !     !  !     !  !     !
!     !  !     !  !     !  !     !

  !     !  !     !  !     !  !     !
  !     !  !     !  !     !  !     !
  !-----!  !-----!  !-----!  !-----!
  !     !  !     !  !     !  !     !
  !     !  !     !  !     !  !     !

!     !  !     !  !     !  !     !
!     !  !     !  !     !  !     !
!-----!  !-----!  !-----!  !-----!
!     !  !     !  !     !  !     !
!     !  !     !  !     !  !     !
```

Example of correct vertical character alignment.

```
!     !  !     !  !     !  !     !
!     !  !     !  !     !  !     !
!-----!  !-----!  !-----!  !-----!
!     !  !     !  !     !  !     !
!     !  !     !  !     !  !     !

!     !  !     !  !     !  !     !
!     !  !     !  !     !  !     !
!-----!  !-----!  !-----!  !-----!
!     !  !     !  !     !  !     !
!     !  !     !  !     !  !     !

!     !  !     !  !     !  !     !
!     !  !     !  !     !  !     !
!-----!  !-----!  !-----!  !-----!
!     !  !     !  !     !  !     !
!     !  !     !  !     !  !     !
```

DATE: September 1, 1992

REVISION DATE: December 18, 1992

BULLETIN NO: I/O:157

PRODUCT: 25-4Ø79 Jtape 6Ø Meg Tape Backup
25-4Ø79A Jtape 6Ø Meg Tape Backup

SUBASSEMBLY: AXX-52Ø4

AUTHOR: Rodger F. Jones

PURPOSE: Substituting a 25-4Ø79A tape drive for a 25-4Ø79 in SCO Xenix 386 systems.

DISCUSSION:

When replacing a 25-4Ø79 Jtape tape backup unit with a unit from exchange, Business Products Parts will send a 25-4Ø79A tape drive. The new drive is not software compatible with the old drive. A set of driver disks for Xenix, Unix and MS-DOS will be included, as well as manuals. The instructions in the manuals assume the drive will be installed in a system that has never had a tape drive, therefore they are incomplete when replacing a 4Ø79 with a 4Ø79A. This bulletin will explain how to do the software upgrade necessary to switch from a 25-4Ø79 to a 25-4Ø79A.

NOTE: The device name changes when the new Xenix drivers are installed. The 25-4Ø79 device name was /dev/rmtØ. The 25-4Ø79A device name is /dev/rjtØ. Any "automatic" scripts or programs calling the tape drive may need to be modified with the new name.

The 25-4Ø79A version tape drive can be identified by its white plastic chassis. The 25-4Ø79 has a black plastic chassis.

SCO Xenix **386** versions before 2.3, and SCO Xenix **286** (all versions) do NOT support the 4Ø79**A** drive. You will have to contact Business Products Parts to get an original 25-4Ø79 when replacing a defective one.

Tandy System V Xenix for 286 based systems does NOT support the 4Ø79 or the 4Ø79A drive.

PROCEDURE:

1. Have all the users log off the system.

2. Shutdown the system and replace the 25-4Ø79 drive with a 25-4Ø79A drive.

3. Reboot the system into multiuser mode and login as root.

4. At the root prompt type:

   mkdev jtape <ENTER>

5. A menu will appear. Select "Remove Jtape Tape Driver":

   2 <ENTER>

6. The message:

   "Would you like to remove the Jtape tape device file (y/n)"

   will appear. Type:

   y <ENTER>

   Some messages about removing the drivers will appear and then:

   You must create a new kernel to effect the driver change you specified. Do you wish to create a new kernel now? (y/n)

   Type:

   y <ENTER>

   Some more messages will appear about linking the kernel and then:

   Do you want this kernel to boot by default? (y/n)

   Type:

   y <ENTER>

   Another message will appear about rebooting the system and then the root prompt will appear. Don't reboot the system yet.

7. At the root prompt type:

   custom <ENTER>

8. Custom's main menu will appear. One of the choices will read:

   X. Jtape Tape Driver.

   Select this choice by typing:

   X <ENTER>

   where "X" is the menu choice for Jtape Tape Driver.

9. Another menu will appear. Select "Remove one or more packages":

    2 <ENTER>

   A list of two Jtape drivers will appear. We will remove both by typing:

    286 386 <ENTER>

10. After removing these drivers, the main Custom menu will appear. Type:

    q <ENTER>

11. Change directories by typing:

    cd /etc/perms <ENTER>

   Remove the "jtape" file by typing:

    rm jtape <ENTER>

12. Shutdown and reboot the system into multiuser mode. Login as root.

13. Insert the diskette labelled "Xenix 60 meg tape drivers - 25-4079A" into diskette drive A.

14. At the root prompt type:

    custom <ENTER>

15. Custom's main menu will appear. One of the choices will read:

    4. Add a Supported Product.

   Select this choice by typing:

    4 <ENTER>

   A message will appear:

    Insert Distribution Volume 1 and press <RETURN> or enter q to quit:

   Press:

    <ENTER>

16. Another menu will appear. Select "Install one or more packages":

    1 <ENTER>

17. A list of one Jtape driver will appear. Install Jtape by typing:

    jtape <ENTER>

    A message will appear:

    Insert Jtape Tape Driver volume 1 and press <RETURN> or enter q to return to the menu:

    Press:

    <ENTER>

    A message "Extracting files ..." will appear and then the message "Installing Jtape Tape Drivers and Software."

18. A screen entitled "Tape Backup System" will appear with the menu below:

```
Install Menu
============

        F1 - Install Tape Software (English)
        F1Ø - Exit Tape Software
```

    Press:

    <F1>

19. Another screen will appear entitled "Tape Install/Configure" with another menu. Select "Floppy Tape Adapter (Tape Adapter Board)":

    <F3>

    A message "Copying Files:" will appear and then the message "TAPE SYSTEM INSTALLATION SUCCESSFUL".

2Ø. To leave the Install program, press:

    <F1Ø> <F1Ø>

21. The message "Adding jtape driver to system configuration..." will appear and then:

    You must create a new kernel to effect the driver change you specified. Do you wish to create a new kernel now? (y/n)

    Type:

    y <ENTER>

    Some more messages will appear about linking the kernel and then:

    Do you want this kernel to boot by default? (y/n)

    Type:

    y <ENTER>

    Another message will appear about rebooting the system and then the Custom menu will appear. Type:

    q <ENTER>

    The root prompt will appear.

22. Remove the driver disk from diskette drive A.

23. Shutdown and reboot the system into multiuser mode. Login as root.

24. The new tape drivers are now installed. Typing:

    jtape <ENTER>

    will bring up a screen with menu choices. Follow the examples in the user's manual to test the drive.

DATE:	August 28, 1992	
REVISION DATE:	August 28, 1992	
BULLETIN NO:	I/O:158	
PRODUCT:	26-28Ø4	LP1ØØØ Laser Printer
SUBASSEMBLY:	AXX-6Ø22 DC-ØØØ2	Charge/bias Power Supply Development Unit
SUBASSEMBLY REVISION:	All	
AUTHOR:	Mike Gephart	

PURPOSE: Adjustment for replacement development units that exhibit light print in LP1ØØØ laser printers.

DISCUSSION:

The charge/bias power supply generates large negative voltages for two items; the drum unit (charge), and the development unit (bias). It sits in the upper portion of the printer, partially beneath the main controller board. Refer to the service manual, pages 119 and 12Ø, for further clarification.

When a development unit is replaced, lighter print may be experienced. To compensate for this, it is necessary to adjust the bias voltage level going to the development unit voltage terminal.

PROCEDURE:

To adjust the charge/bias power supply, follow the procedure given below.

1. Turn the printer off and unplug the AC cord. Disconnect any printer cables.

2. Remove the top case. Refer to the service manual, page 121, for information on this procedure if you are not familiar with it.

3. Remove the interlock switch cover. Refer to the service manual, page 143, for information on this procedure if you are not familiar with it.

4. Install the interlock defeat bracket. This bracket was sent to all service centers.

5. Figure 1 shows the location of many internal components of the laser printer. When the top half of the printer is closed, the development bias voltage terminal (item 16) makes contact with the development unit bias voltage terminal (item 18).

   Wrap a test lead around the development unit bias voltage terminal (item 18). The arrow shows the way of routing the test lead. Lay it along the top edge of the development unit, and then out of the hole through the back of the printer, as shown. Insure that the test lead does not come in contact with any of the gears. Close the top half of the laser printer.

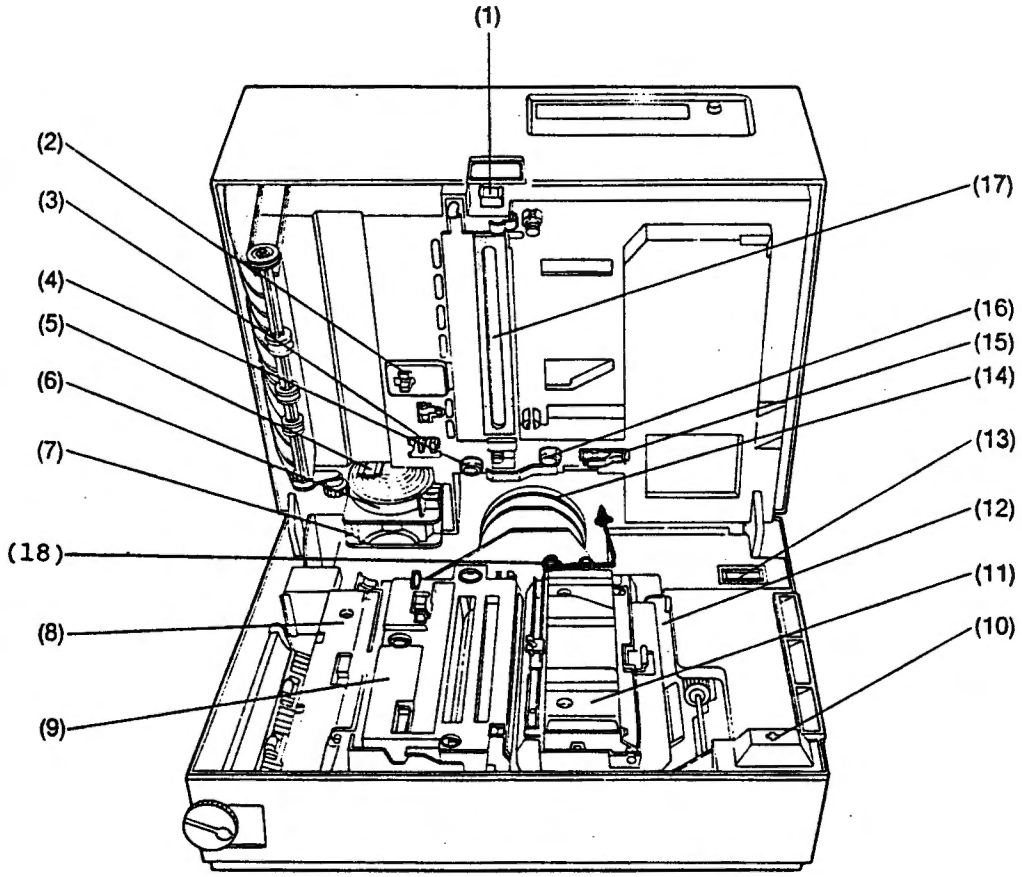

(1) Shield plate
(2) Toner overflow sensor
(3) Type sensor
(4) Charge voltage terminal
(5) Reset lever
(6) Ozone filter
(7) Fan
(8) Fusing cover
(9) OPC magazine (cleaning unit)
(1Ø) Interlock switch
(11) Development unit
(12) Processing unit case
(13) Print counter
(14) Main motor
(15) Toner-end sensor
(16) Development bias voltage terminal
(17) Laser beam shutter
(18) Development unit bias voltage terminal

Figure 1

6. Connect the test lead to the negative lead of a meter. Connect the positive lead to chassis ground. In this way, the meter will show a positive voltage reading even though you are actually measuring a negative voltage.

7. The potentiometer that is to be adjusted is part of the charge/bias power supply. From the back of the printer, it is recessed in about 3 inches. Position a plastic TV alignment screwdriver (with an extender) through the back of the printer as shown in figures 2 and 3. Figure 2 shows a rear view of the printer with the case top off and closed. Figure 3 shows an enlarged view of the area showing the exact location of the potentiometer. A flashlight may be necessary to help locate the potentiometer. **DO NOT** push in too hard towards the potentiometer, as it may bend and become unadjustable.

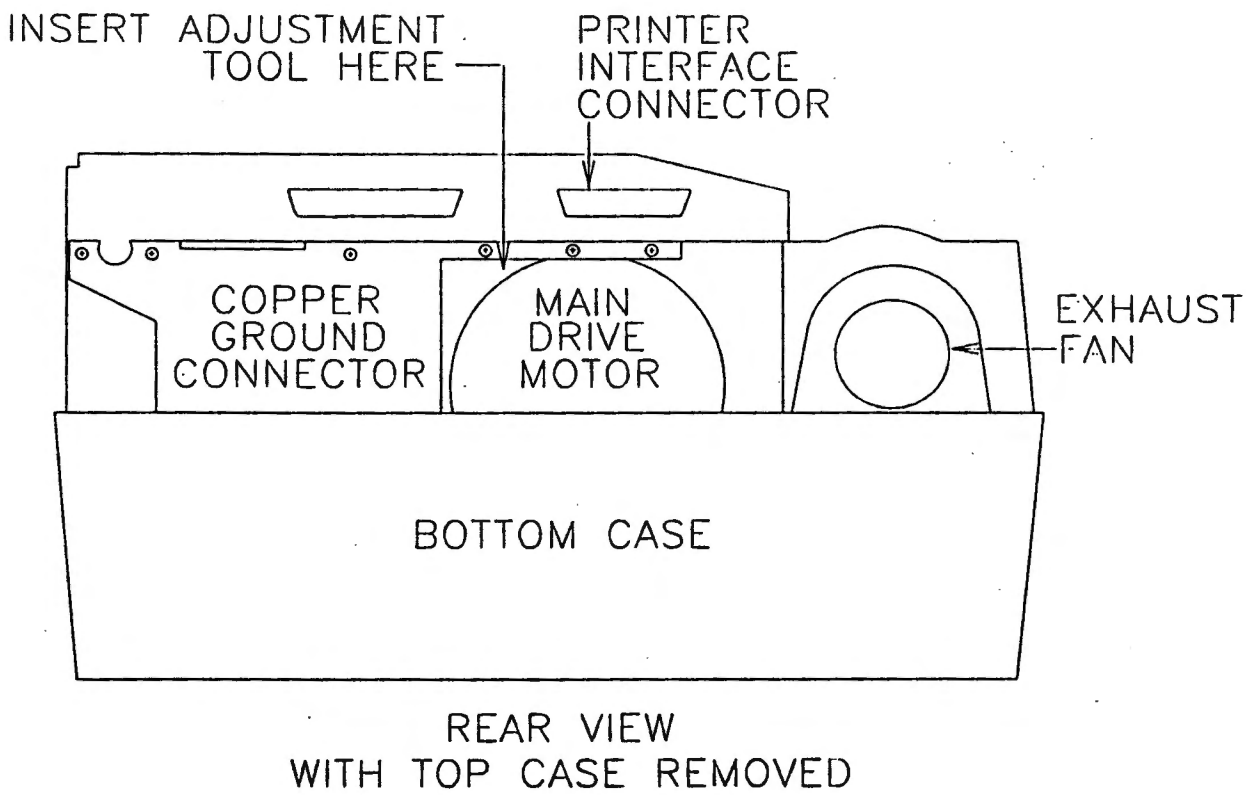

Figure 2

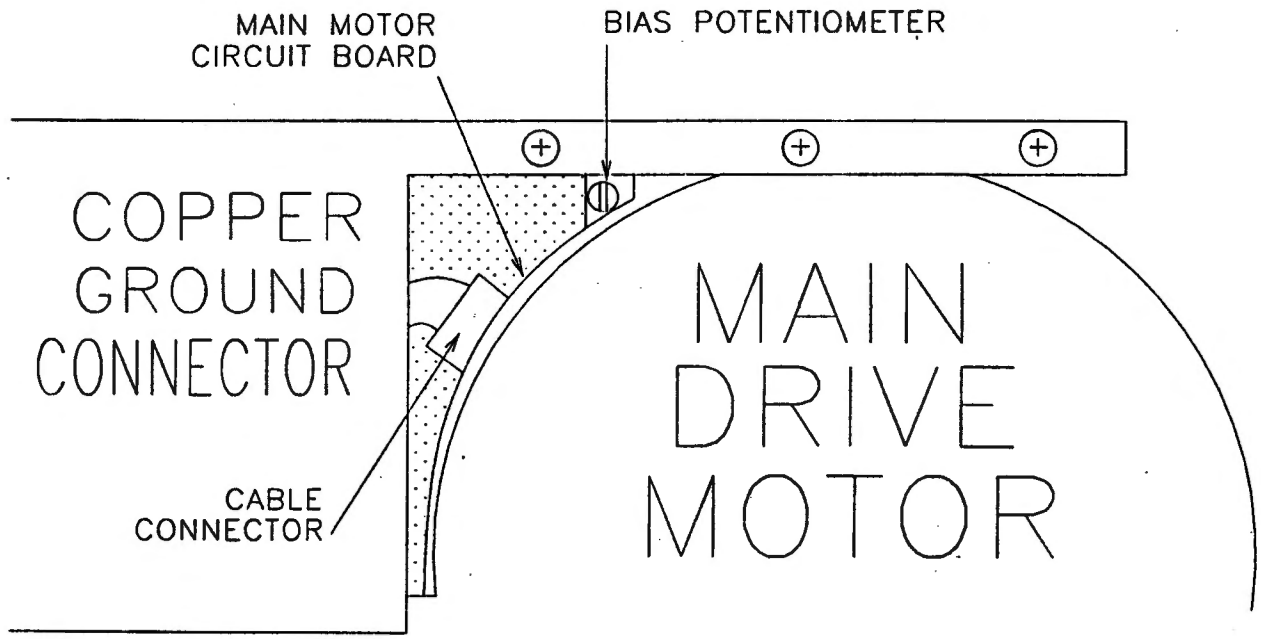

Figure 3

8. Plug in the AC cord. Turn the printer on.

9. Wait for it to warm up. Then press and release the on-off line button. Now press and release the test button. This will initiate a self test printout.

10. Adjust the bias potentiometer counterclockwise to lower the voltage (take it closer to zero volts), and clockwise to raise the voltage (make it more negative). Continue executing self test printouts and adjusting the potentiometer in small increments, until the print reaches the desired darkness. **DO NOT** adjust the bias voltage more negative than -900 VDC. If the print is not dark enough when the voltage reaches this level, then replacement of the development unit or the charge bias power supply is necessary. Try replacing either of these items one at a time and readjust.

DATE:	April 5, 1993	
REVISION DATE:	April 5, 1993	
BULLETIN NO:	I/O:159	
PRODUCT:	26-1245/6	Tandy Disk Cartridge System
SUBASSEMBLY:	TA-Ø418 TA-Ø419	Astec Power Supply Boschert Power Supply
SUBASSEMBLY REVISION:	All	
AUTHOR:	Tom Williams	

PURPOSE: Replacement procedure for DCS power supply.

DISCUSSION:

The TA-Ø418 and the TA-Ø419 power supplies are no longer available from National Parts. However, you can use the TA-Ø428 power supply from the Model 4 as a substitute. You will need to make some wiring changes before this substitution will work.

PROCEDURE:

Caution: When troubleshooting power supplies, dangerous voltages may be present. Appropriate precautions should always be observed. **Never run a switching power supply unloaded!** Damage to the power supply may result. Additionally, you must use an isolation transformer for proper protection.

1. Remove the defective power supply from the Disk Cartridge System.

2. Remove the metal shield from the power supply board.

3. Remove the wires and metal terminals from the 13 pin molex connector on the wiring harness.

4. Place the substitute power supply board on your bench, component side up, with the fuse in the lower right corner.

5. Plug in the 13 pin female molex connector to the substitute power supply.

6. Install the wires into the connector in the following order. Start counting the pins from the end of the 13 pin molex connector closest to the fuse.

A.	Pin 5	+12VDC	Blue
B.	Pin 8	+5VDC	Red
C.	Pin 11	COM	Black
D.	Pin 12	COM	Black

7. Replace the 2 pin male connector on the substitute power supply with the 3 pin connector from the old power supply. The locking lip of the connector must face to the outside of the board. Wire the connector as follows. Start counting the pins from the end of the molex connector closest to the fuse.

A.	Pin 1	AC Line	Black
B.	Pin 2	AC Neut	White
C.	Pin 3	AC Gnd	Green/Yellow

8. Reassemble the DCS and verify proper voltage levels.

Part Number	Description	Catalog number
TA-Ø428	Power Supply, 65 Watt	26-1Ø69

COPYRIGHT © 1993

TANDY COMPUTER PRODUCTS

DATE: April 5, 1993

REVISION DATE: April 5, 1993

BULLETIN NO: I/O:16Ø

PRODUCT: 26-2888 LP4ØØ Laser Printer
26-2889 LP41Ø Laser Printer

SUBASSEMBLY: H-ØØ64 Scanner laser unit

SUBASSEMBLY REVISION: All

AUTHOR: Joe Hurtado

PURPOSE: Scanner laser unit causing the printer to lock up.

DISCUSSION:

During normal operation the LP4ØØ/41Ø should be able to print one self test after another. The LP4ØØ/41Ø may lock up after printing one self test. The symptom will show itself when attempting a second self test. The display will show, **"STATUS PRINT"** but will not print. When opening the printer's cover and closing it, it will then print the second self test plus an extra blank piece of paper.

PROCEDURE:

If you observe this symptom, replace the scanner laser unit first. It is known to correct this symptom.

Description	Part #	Catalog #
scanner laser unit	H-ØØ65	26-2888/26-2889

COPYRIGHT © 1993

TANDY COMPUTER PRODUCTS

DATE:	May 7, 1993	
REVISION DATE:	May 7, 1993	
BULLETIN NO:	I/O:161	
PRODUCT:	26-2888	LP-4ØØ Laser Printer
SUBASSEMBLY:	AX-Ø828	Main Controller PCB
SUBASSEMBLY REVISION:	ALL	
AUTHOR:	Dan Canright	

PURPOSE: Program ROM upgrade to allow proper printing of Windows Truetype fonts in landscape mode.

DISCUSSION:

When printing from Windows in landscape mode with a Truetype font selected, all characters on a line are printed in the first column, each character being printed on top of the preceding character.

Upgrading to BIOS ROM version V226Ø will allow proper printing of Windows Truetype fonts in the landscape mode. The LP-4ØØ has two program ROMs and two font ROMs. Only the two program ROMs need to be replaced to upgrade to version V226Ø.

If a unit is brought in for service with this complaint, follow this procedure.

PROCEDURE:

1. Perform a status print - Turn the printer OFF LINE, hold down the "PRINT FONT/TEST" button until "STATUS PRINT" appears in the LCD display, then release the button. A status sheet will print out.

2. Look for the BIOS ROM version number in the upper right corner of the page. If it is prior to "Version: V226Ø" the upgrade ROM set is needed. If needed, proceed to step 3.

3. Power off the printer, disconnect the power cord and printer cable.

4. At this point, make sure you have taken anti-static precautions. If there is a font cartridge installed, remove it. The font cartridge slot is located under a hinged plastic door at the right rear top of the printer.

5. Loosen the two thumb screws at the back of the LP-4ØØ, which secure the Main Controller PCB, then pull the Main Controller PCB out of the printer. There are two font ROMs (IC22 and IC24) and two program ROMs (IC23 and IC25). Remove the two program ROMs - IC23 and IC25.

6. Install the new program ROMs. The ROM with checksum 7994 goes in location IC23. The ROM with checksum 1655 goes in location IC25.

7. Slide the PCB back into the printer and tighten the thumb screws.

8. If a font cartridge was removed, install it.

9. Power on the unit and do another "STATUS PRINT" as outlined in step one. Verify that the version is now "Version: V226Ø".

PART DESCRIPTION	PART NUMBER	CATALOG #	ORDER FROM
BIOS V226Ø, CS7994, IC23	MXP-1297	26-2888	National Parts
BIOS V226Ø, CS1655, IC25	MXP-1296	26-2888	National Parts

TECHNICAL BULLETIN COPYRIGHT 1993

TANDY COMPUTER PRODUCTS

DATE: June 18, 1993

REVISION DATE: June 18, 1993

BULLETIN NO: I/O:162

PRODUCT: 26-2838 LP950 Laser Printer
26-2879 LP990 Laser Printer

SUBASSEMBLY: AX-0488 ICU PCB for LP950
AX-0651 ICU PCB for LP990

SUBASSEMBLY REVISION: ALL

AUTHOR: Mike Gephart

PURPOSE: Procedure to clear the error message BRLOPE=ENVELOP= on an LP950 or LP990.

DISCUSSION:

The LP950/990 laser printer stores its current operational status in NVRAM (Non Volatile Random Access Memory). It is possible for this memory to be altered when the printer is turned off, causing the error message "BRLOPE=ENVELOP=" to be displayed on the LCD display. When this occurs the printer will not operate beyond this point. It may be possible to clear this error message by initializing this internal NVRAM. This is accomplished by shorting a jumper plug on the ICU PCB and powering up the unit.

PROCEDURE:

1. Turn off the power to the printer. Remove any font cards or memory expansion cartridge that might be installed. Remove the ICU PCB (the main logic board) and place a jumper on jumper plug J3. It is the only jumper plug on the ICU board.

2. Reinstall the ICU PCB and power up the printer. The printer will beep three times and the LCD display will read INITIALIZE.

3. Turn off the power to the printer. Remove the ICU PCB and remove the jumper that was installed in step 1.

4. Reinstall the ICU PCB and power up the printer. If the printer powers up properly, the procedure worked. If the error message is still displayed, it will be necessary to replace the ICU PCB.

5. If the procedure worked properly, turn off the power and reinstall any font cards or memory cartridge removed in step 1. Then power up the printer and verify proper operation.

TECHNICAL BULLETIN COPYRIGHT 1993

TANDY COMPUTER PRODUCTS

DATE: May 27, 1993

REVISION DATE: November 3, 1993

BULLETIN NO: I/O:163

PRODUCT: 43-1201 Tandy FAX 1040

SUBASSEMBLY: XB-4307 CCD Board

SUBASSEMBLY REVISION: All

AUTHOR: Joe Hurtado

PURPOSE: Gray or black printout when transmitting or copying document

---

DISCUSSION:

When attempting to transmit or copy a document with a Tandy 1040 fax machine the printout could be gray or black. Replacing the optical assembly block (CCD) will cure this symptom. Before replacing the CCD board, you must check the alignment first. Misalignment of the CCD board will cause the same symptom. Because many of the CCD boards have a thermal problem, after completing the alignment procedure, the unit must be tested thoroughly. Alignment is necessary when replacing this assembly.

PROCEDURE:

Tighten the two screws holding the CCD board enough to hold the board in place, but still be able to move the CCD board. You will need an oscilloscope and four 12" long jumper wires. Remove the main board and the modem board from the unit. Locate connector P13 on the main board. Solder the jumper wires to the bottom side of P13, one to each pin. Mark the jumper wires so that you are able to identify which jumper wire goes to what pin.

From the main board, record the original dip switch setting. Then set dip switch bit 5 OFF, 6 ON and 7 ON. Reinstall the two boards removed earlier and run the the jumper wires outside the unit. Connect the scope in the following manner:

Channel 1	- Connect to P13-1	5 volts/division	.5 millisecond/division
Channel 2	- Connect to P13-2	1 volts/division	.5 millisecond/division
Ext. Trigger	- Connect to P13-3		
Ground	- Connect to P13-4		

P13-1: IWIN, to indicate the range of effective data from CCD output.
P13-2: IOUT, CCD output signal.
P13-3: TSH, START signal of one line scan.
P13-4: GND, signal ground.

Reconnect all cables and power on the unit. The alert, voice request and power LED lights will start flashing. Do not press the stop button before adjusting the CCD board because this will set the signals to standby mode.

Adjust the CCD board so that the waveform timing looks as close to Figure 1 as possible with the top cover off. Because the CCD board can be influenced by light, if possible turn off all lights or use a piece of cardboard to cover the top of the unit. The top cover must be on to verify final waveform signals. Press the stop button and the alert and voice request LED will go off. Insert a document and press the start/copy button to verify correct alignment.

Waveform 1 shows a positive pulse equivalent to a scan time window. Waveform 2 shows a negative pulse which represents available light to the CCD during scan time.

When adjusting the CCD, two things must occur. First, the negative pulse of waveform 2 must start at or before the start of the pulse of waveform 1, and must end at or after the end of the pulse of waveform 1. Second, the pulse must be 1.5 volts throughout the scan window, use VR1 on the CCD board to adjust this voltage. The further away the pulse is from GND (more positive), the grayer the background.

Channel 1 - 5 volts/division

Channel 2 - 1 volts/division
Timebase - .5 milliseconds/division
Figure 1

TECHNICAL BULLETIN COPYRIGHT 1993

TANDY COMPUTER PRODUCTS

DATE: June 25, 1993

REVISION DATE: June 25, 1993

BULLETIN NO: I/O:164

PRODUCT: 26-2838 LP950 Laser Printer
26-2879 LP990 Laser Printer

SUBASSEMBLY: S-0150 Toner sensor switch

SUBASSEMBLY REVISION: ALL

AUTHOR: Mike Gephart

PURPOSE: Toner empty sensor dirty or failed causing "REPL.DEVELOPER" message on the LCD display.

DISCUSSION:

The LP950/990 uses a two-element toner in the development unit. This two-element toner consists of magnetic particles, called carrier, and toner, which consists of carbon particles and resin. The carbon particles are the "ink" and the resin is the glue, which is melted and fused to the paper in the fusing section of the printer.

A metal agitator arm inside the development unit stirs the toner to mix it with the carrier particles, causing a magnetic charge to be evenly spread throughout the toner. In this way, the toner can be "carried" to the development unit roller. The development unit roller has magnets in it that attract the magnetic toner. The development unit roller can then supply toner to the organic photoconductive (OPC) drum.

The LP950/990 uses an optical sensor with a magnet attached to the sensor arm to sense the amount of toner present in the development unit. When toner is present in sufficient quantity in the development unit, the magnet is attracted to the development unit. The sensor arm does not block the beam of the optical sensor, which signals to the printer the presence of a sufficient amount of toner to operate properly. When toner is depleted, the magnet falls away from the development unit, causing the sensor arm to block the beam of the optical sensor, which signals to the printer that the toner is empty.

Before shipping an LP950/990, the toner collector cup must be removed and enclosed in a separate container. If it is not removed, toner can spill into the interior of the printer. This spilled toner can, and often does, cover the sensor. This blocks the beam of the optical sensor, which signals to the printer a false toner empty condition.

TECHNICAL BULLETIN COPYRIGHT 1993

TANDY COMPUTER PRODUCTS

PROCEDURE:

1. Push the opener to open the upper frame unit. Remove the top cover of the upper frame unit. Refer to the service manual, page 24 for details on removing this top cover.

2. Remove the development unit. The sensor/arm/magnet assembly is located in the front center of the upper frame unit, just below where the development unit would sit.

3. Located behind the laser unit is a small interconnect board. Using a meter or scope, measure the voltage of CN34, pin 2, while moving the magnet up and down. On a properly working sensor, the signal will change from a LOW voltage when the magnet is up, to a HIGH voltage when the magnet is down.

   If the voltage does not change when the magnet is moved up and down, the sensor is either dirty, or it has failed. Try cleaning it with a cotton swab and alcohol. It may take several attempts at cleaning to allow it to function properly. If it does not work after several attempts at cleaning, it will need to be replaced.

TECHNICAL BULLETIN COPYRIGHT 1993

TANDY COMPUTER PRODUCTS

DATE: October 15, 1993

REVISION DATE: October 15, 1993

BULLETIN NO: I/O:165

PRODUCT: 43-1207 Tandy FAX 1020

SUBASSEMBLY: XB-3772 PCB Assy. Scanner (CCD)

SUBASSEMBLY REVISION: All

AUTHOR: Joe Hurtado

PURPOSE: Alignment procedure for the CCD board.

DISCUSSION:

The Tandy Fax 1020 CCD alignment procedure is very similar to the Tandy Fax 1040 CCD alignment. Alignment is necessary when replacing the CCD board or when printout is gray or black when transmitting or copying a document.

PROCEDURE:

To do this alignment you will need an oscilloscope with three probes and two 6" long jumper wires. Remove the four screws on the bottom of the unit that holds the Main PCB to the bottom case. Locate U8 (HD63084FP) on the Main PCB. Solder one jumper wire to pin 33 and one to pin 52. Mark the jumper wires so that you are able to identify which jumper goes to which pin. Locate TP1 and TP2 on the main logic board and connect the scope in the following manner:

Channel 1	- Connect to Pin 33	2 volts/division	.5 millisecond/division
Channel 2	- Connect to TP2 MLB	.5 volts/division	.5 millisecond/division
Ext. Trigger	- Connect to Pin 52		
Ground	- Connect to TP1 MLB		

TP1: GND, signal ground.
TP2: IOUT, CCD output.
Pin 33: IWIN, to indicate the range of effective data from CCD output.
Pin 52: TG, START signal of one line scan.

Remove the top cover and the four screws holding the complete TX assembly (see service manual for disassembling instructions). Place the TX assembly on top of the RX assembly. Loosen the two screws holding the CCD board enough so that you are able to move the CCD board, but tight enough to hold it in place.

Power on the unit and activate the test mode by pressing [START/COPY] for about four seconds in standby mode until you hear a long beep. Then set the slide switches to HALF TONE and AUTO positions. Press [STOP] and then [START]. This will put the Fax machine into a lamp test mode. The green fluorescent lamp will come on and the unit will sound a long beep tone. The purpose for putting the Fax machine into the lamp test mode is to activate the signals needed to adjust the CCD board. If the unit has some problem with the lamp, it sounds eight warning tones after about eight seconds. This can be caused by the CCD board being too far out of alignment. Adjust the CCD board and retry the lamp test mode to see if this eliminates the problem.

Adjust the CCD board so that the waveform timing looks as close to Figure 1 as possible with the top cover off. Because the CCD board can be influenced by light, if possible turn off all lights or use a piece of cardboard to cover the top of the unit. The top cover must be on to verify final waveform alignment. Place the TX assembly back into the chassis, then place the top cover back on. Because the test points are accessed from the bottom of the unit, the top cover can be installed without rerouting the test leads.

Press [STOP], and insert a document and press the [START/COPY] button to verify correct alignment.

Waveform 1 shows a positive pulse equivalent to a scan time window. Waveform 2 shows a negative pulse which represents available light to the CCD during scan time.

When adjusting the CCD, two things must occur. First, the negative pulse of waveform 1 must start at or before the start of the pulse of waveform 2, and must end at or after the end of the pulse of waveform 2. Second, the pulse must be 1.5 volts throughout the scan window. If needed use VR1 on the CCD board to adjust this voltage. The further away the pulse is from GND (more positive), the grayer the background.

Channel 1 - 2 volts/division
Channel 2 - .5 volts/division

Timebase - .5 milliseconds/division

Figure 1

TECHNICAL BULLETIN COPYRIGHT 1993

TANDY COMPUTER PRODUCTS

DATE: October 20, 1993

REVISION DATE: October 20, 1993

BULLETIN NO: I/O:166

PRODUCT: 26-2873

SUBASSEMBLY: AX-0845 Main Logic Board

SUBASSEMBLY REVISION: All

AUTHOR: Gene Hamilton

PURPOSE: The original fast blow 4.0A fuse in the JP250 ink jet printer has been replaced in current production units with a 3.2A slow blow fuse to prevent occasional fuse blowing.

DISCUSSION: The new 3.2A fuse is to be used to replace the 4.0A fuse in the original production units.

** Compliance with this Bulletin is Mandatory **

PROCEDURE: When a JP250 is in the shop, examine the fuse at F1. If it is a 3.2A fuse, no modification is necessary.

If the fuse at F1 is a 4.0A fuse, replace it with a 3.2A fuse, available from National Parts as shown below.

PARTS NEEDED:

Description	Part#	Catalog#
3.2A SLO BLOW micro mini with pigtails	HF-0371	26-2873

TECHNICAL BULLETIN COPYRIGHT 1993

TANDY COMPUTER PRODUCTS

DATE: October 22, 1993

REVISION DATE: October 22, 1993

BULLETIN NO: I/O:167

PRODUCT: 25-1077 CDR-1000
25-1077A CDR-1000A

SUBASSEMBLY: All

SUBASSEMBLY REVISION: All

AUTHOR: Rance McCloskey

PURPOSE: Incorrect DOS version error when using the CDR-1000 or CDR-1000A with MS-DOS version 6.0.

DISCUSSION:

An incorrect DOS version error will occur when trying to load the MSCDEX.EXE driver that is used to operate a CDR-1000 or 1000A when used in conjunction with MS-DOS version 6.0. This error causes the driver not to load and the drive not to function. Using the original MSCDEX.EXE file that comes on the CDROM utilities diskette causes the error. To eliminate the error, use the MSCDEX.EXE file that come with MS-DOS version 6.0.

PROCEDURE:

If you get an incorrect DOS version error when trying to load the MSCDEX.EXE driver, check to see what version of MS-DOS is installed. You can determine the MS-DOS version used by typing:

VER <enter>

The MS-DOS version will be displayed. If the MS-DOS version is 6.0 or later, you must change the path in the AUTOEXEC.BAT file so the MSCDEX.EXE file that comes with MS-DOS version 6.0 is used.

The line that is added to the AUTOEXEC.BAT file during the installation of a CDR-1000 or 1000A is:

\BIN\MSCDEX.EXE /D:MSCD001

Use your favorite editor and change the path in the AUTOEXEC.BAT file so the MSCDEX.EXE file that comes with MS-DOS 6.0 is used.

TECHNICAL BULLETIN COPYRIGHT 1993

TANDY COMPUTER PRODUCTS

The following is an example of the AUTOEXEC.BAT file assuming that MS-DOS version 6.0 is installed in a directory called DOS:

```
\DOS\MSCDEX.EXE /D:MSCD001
```

After changing the AUTOEXEC.BAT file you must reboot the computer for the changes to take effect.

NOTE: This same error message may occur when using other CDROM drives in conjunction with MS-DOS version 6.0. If you get an incorrect DOS version error when trying to load MSCDEX.EXE with any CDROM drive, change the path in the AUTOEXEC.BAT file so the MSCDEX.EXE file that comes with MS-DOS 6.0 is used. This will eliminate the error.

NOTE: The incorrect DOS error will occur even with the SETVER.EXE file loaded.

TECHNICAL BULLETIN COPYRIGHT 1993

TANDY COMPUTER PRODUCTS

DATE: November 23, 1993

REVISION DATE: November 23, 1993

BULLETIN NO: I/O:168

PRODUCT:	25-1092	CDR-1100
	25-1098	CDR-3100
	25-1640	MMPC Model 10
	25-1641	MMPC Model 10A
	25-1650	SENSATION
SUBASSEMBLY:	AXX-5426	LMS 205 CDROM Drive
	AXX-5404	LMS 205 CDROM Drive
	AXX-5384	LMS 205 CDROM Drive

SUBASSEMBLY REVISION: All

AUTHOR: Rance McCloskey

PURPOSE: Identifying the different types of LMS CDROM drives.

DISCUSSION:

There has been some confusion about the LMS CDROM drives. There are several different versions of the LMS 205 CDROM drive. Several computers use the same model CDROM drive, but due to differences in the drives, you cannot interchange all of them without changing the software driver. (i.e. If you try to use an AXX-5404 hardware revision F drive from the MMPC Model 10 with the software driver (DD250.SYS) from the CDR-1100, the driver will not load.) The following information will help you to identify LMS CDROM drives and choose the correct software driver.

YOU MUST MATCH THE SOFTWARE DRIVER WITH THE HARDWARE REVISION OF THE DRIVE!!!

ORIGINAL CONFIGURATIONS:

The following section lists the original configurations that were shipped:

PRODUCT	CATALOG#	PART#	CHECKSUM	VERSION	DATE
CDR-1100	25-1092 ..	AXX-5426 ..	CS=4220H ..	....	Sept/27/1991
CDR-3100	25-1098 ..	AXX-5426 ..	CS=66DEH ..	V.01 ...	92/04/28
MMPC Model 10 ..	25-1640 ..	AXX-5404 ..	CS=D88EH ..	V.02 ...	93/05/11
MMPC Model 10A .	25-1641 ..	AXX-5404 ..	CS=D88EH ..	V.02 ...	93/05/11
SENSATION	25-1650 ..	AXX-5384 ..	CS=66DEH ..	V.01 ...	92/04/28

NOTE: The CHECKSUM, VERSION, and DATE are located on the ROM that resides on the drive’s logic board.

TECHNICAL BULLETIN COPYRIGHT 1993

TANDY COMPUTER PRODUCTS

HARDWARE REVISIONS:

The following section lists the original hardware revisions that were used:

PRODUCT	PART#	HARDWARE REVISION
CDR-1100	AXX-5426 ...	B or D
CDR-3100	AXX-5426 ...	D or B
MMPC Model 10 ..	AXX-5404 ...	F or E with 326 date code or later
MMPC Model 10A .	AXX-5404 ...	F or E with 326 date code or later
SENSATION	AXX-5384 ...	C or E with a date code earlier than 326

NOTE: The hardware revision is determined by the first letter of the serial number. For more information, refer to the serial number section of this bulletin.

NOTE: The hardware revision F drives (AXX-5404) will be substituted for hardware revision B and D drives (AXX-5426) if the hardware revision B and D drives are not available.

NOTE: The hardware revision F drives will be shipped with the drivers that will allow a hardware revision F drive to be substituted for a hardware revision B or D drive.

SOFTWARE DRIVER REVISIONS:

The following is a list of the original software drivers:

PRODUCT	PART#	SOFTWARE DRIVER	SIZE	DATE	TIME
CDR-1100	AXX-5426 ..	DD250.SYS	25440 ..	02/04/93 ..	2:37P
CDR-3100	AXX-5426 ..	DD250.SYS	24379 ..	08/25/92 ..	2:29P
MMPC Model 10 ..	AXX-5404 ..	DD251.SYS	30704 ..	05/18/93 ..	1:44P
MMPC Model 10A .	AXX-5404 ..	DD251.SYS	31552 ..	08/09/93 ..	4:28P
SENSATION	AXX-5384 ..	LMSDD250.SYS ...	24379 ..	08/25/92 ..	2:29P

NOTE: A software drivers diskette will be shipped with all hardware revision F drives. You MUST use this diskette when substituting an AXX-5404 drive for an AXX-5426 drive.

TECHNICAL BULLETIN COPYRIGHT 1993

TANDY COMPUTER PRODUCTS

GENERAL INFORMATION:

The AXX-5426 hardware revision B or D drives are not capable of running multi-sessions and will not work with a Kodak photo CD.

The AXX-5404 hardware revision F or E with 326 date code or later drive is capable of running multi-sessions and will work with the Kodak photo CD.

The AXX-5384 hardware revision C or E with a date code earlier than 326 drive has no audio. (i.e. There is no volume knob and speaker jack on the front of the drive.)

The AXX-5404 hardware revision F or E with 326 date code or later drive has ICs missing that are on the AXX-5426 hardware revision B and D drives. (i.e. U5 and U7)

READING THE SERIAL NUMBERS:

The serial number format changed with the F hardware revision. The serial number format is the same for hardware revisions A through E.

The E hardware revision can be either an AXX-5404 or AXX-5384 drive depending on the date code. The fourth, fifth, and sixth numbers of the serial number are the date code. If the date code is 326 or later, the drive is an AXX-5404 drive. If the date code is earlier, the drive is an AXX-5384

The following is the serial number layout:

The following is the format for hardware revisions A through E:

```
A 12 123 1234 12345  (i.e. D023090500I3077)
|  |  |   |     |
|  |  |   |     |
|  |  |   |      - The last 5 numbers are the serial number.
|  |  |   |        (i.e. I3077)
|  |  |   |
|  |  |    ------- These 4 numbers are the model configuration.
|  |  |            (i.e. 0500)
|  |  |
|  |   ----------- These 3 numbers are the year and week.
|  |               (i.e. 309)
|  |
```

```
|   -------------- These 2 numbers are the firmware code revision.
|                  (i.e. 02)
|
 ---------------- The first letter is the hardware revision.
                  (i.e. D)
```


The following is the format for hardware revision F or later:

```
F 12  1  1  1234 123456 (i.e. F05360504029599)
|  |  |  |   |     |
|  |  |  |   |     |
|  |  |  |   |      - The last 6 numbers are the serial number.
|  |  |  |   |        (i.e. 029599)
|  |  |  |   |
|  |  |  |    ------- These 4 numbers are the model configuration.
|  |  |  |            (i.e. 0504)
|  |  |  |
|  |  |    ---------- The next number is the month.
|  |  |               (1,2,3,4,5,6,7,8,9,0,A,B)
|  |  |               (i.e. 6)
|  |  |
|  |   -------------- The next number is the year.
|  |                  (i.e. 3)
|  |
|   ---------------- These 2 numbers are the firmware code revision.
|                     (i.e. 05)
|
 -------------------- The first letter is the hardware revision.
                      (i.e. F)
```

TECHNICAL BULLETIN

COPYRIGHT 1993

TANDY COMPUTER PRODUCTS

DATE: November 8, 1993

REVISION DATE: November 8, 1993

BULLETIN NO: I/O:169

PRODUCT: 25-4053

SUBASSEMBLY: All

SUBASSEMBLY REVISION: MPF420-1

AUTHOR: Anh Nguyen

PURPOSE: To identify proper power input for the Sony MPF420-1 floppy drive.

DISCUSSION:

The Sony MPF420-1 floppy drive can take power from the four-pin connector or from the ribbon cable depending on how SL1 is jumpered (Figure 1). SL1 has four solder pads which are paired as "A" and "B" (Figure 2). The jumper at SL1 is a 0 (zero) Ohm surface-mount resistor. Included on page 2 of this bulletin are jumper settings and test points for the drive.

PROCEDURE:

If the Sony MPF420-1 floppy drive is to be installed in a computer that supplies power (+5DC) through the ribbon cable, the 0 Ohm resistor at SL1 will be soldered as "A". If the drive is to be installed in a computer that provides power through the four-pin power cable, the 0 Ohm resistor at SL1 will be soldered as "B". Make sure this resistor is soldered appropriately.

*** FAILURE TO JUMP SL1 PROPERLY WILL DAMAGE THE MAIN LOGIC BOARD ***

TECHNICAL BULLETIN COPYRIGHT 1993

TANDY COMPUTER PRODUCTS

JUMPERS

The drive has jumper block (COR1) as shown below.

```
 --COR1--------------
|  (1)   (6)   (11)  |
|  (2)   (7)   (12)  |
|  (3)   (8)   (13)  |
|  (4)   (9)   (14)  |
|  (5)   (10)  (15)  |
 --------------------
```

Jumper settings for COR1:

```
  5  - 10 DRIVE SELECT = 0
* 15 - 10 DRIVE SELECT = 1
* 12 - 13 AUTO MODE
  8  - 13 HDIN OR LDIN
  14 - 13 1MB ONLY
  3  - 2  DRIVE ID OUT
  7  - 2  MEDIA ID OUT
  4  - 9  PS2 MODE
* 1  - 6  LED AMBER
  11 - 6  LED GREEN
```

* Default settings

TEST POINTS

The test points and their locations are listed as follows:

Differential read amps	RFA, RFB
Direction	CN1: pin 18
Step	CN1: pin 20
Track 00	CN1: pin 26
Index	CN1: pin 8
Read Data	CN1: pin 30

Ground	CN1: pin 13
Write Protect	CN1: pin 28
Motor On	CN1: pin 16